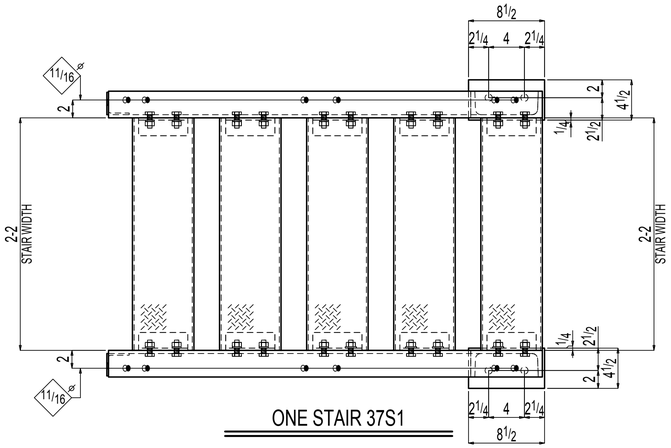

ONE STAIR 37S1

SHOP BOLTS (Unless Noted):
10-1/2 Diax1 1/2 A307

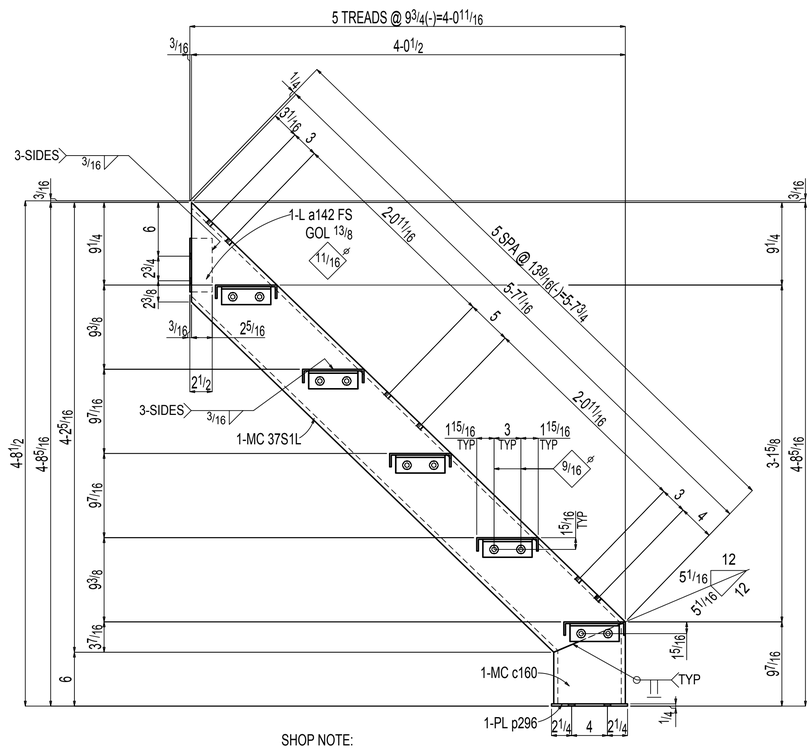

SHOP NOTE:
TOE DIRECTION FAR SIDE

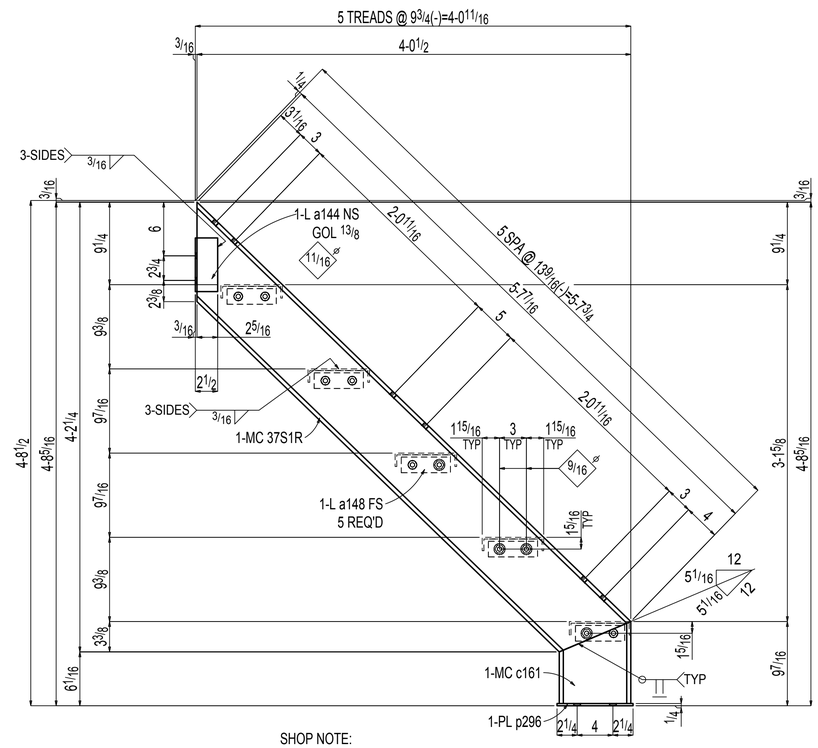

SHOP NOTE:
TOE DIRECTION NEAR SIDE

BILL OF MATERIAL

MARK	QTY	DESCRIPTION	FT	IN	REMARKS
37S1	ONE	STAIR			
37S1L	1	MC8x18.7	5	7 1/2	A36
37S1R	1	MC8x18.7	5	7 1/2	A36
a142	1	L2 1/2x2 1/2x3/16	0	6	A36
a144	1	L2 1/2x2 1/2x3/16	0	6	A36
a147	10	L2x2x1/4	0	5 1/2	A36
a148	10	L2x2x1/4	0	5 1/2	A36
c160	1	MC8x18.7	0	9 3/16	A36
c161	1	MC8x18.7	0	9 3/16	A36
p296	2	PL 1/4x4 1/2	0	8 1/2	A572-50
bp68	5	CHKD3x16x9 1/2	2	2	BENT A36
	10	1/2 Dia A307	0	1 1/2	+1HD WASH
	10	1/2 Dia A325N	0	1 1/2	+1HD WASH
		FIELD BOLTS			
	4	5/8 Dia A307	0	1 3/4	+1HD WASH

SHOP NOTE:
SURFACE PREP:SSPC-SP2

HOLES: 13/16 DIA U.N.O. FINISH: STD SHOP PRIMER

REV	DATE	DESCRIPTION	BY
A			RJL

CLIENT:

ARCH & ENGR:

JOB NAME:

LOCATION:

DETAIL OF:

DATE: DRAWN BY:

CHECKED BY: JOB #

DWG. # 37 A

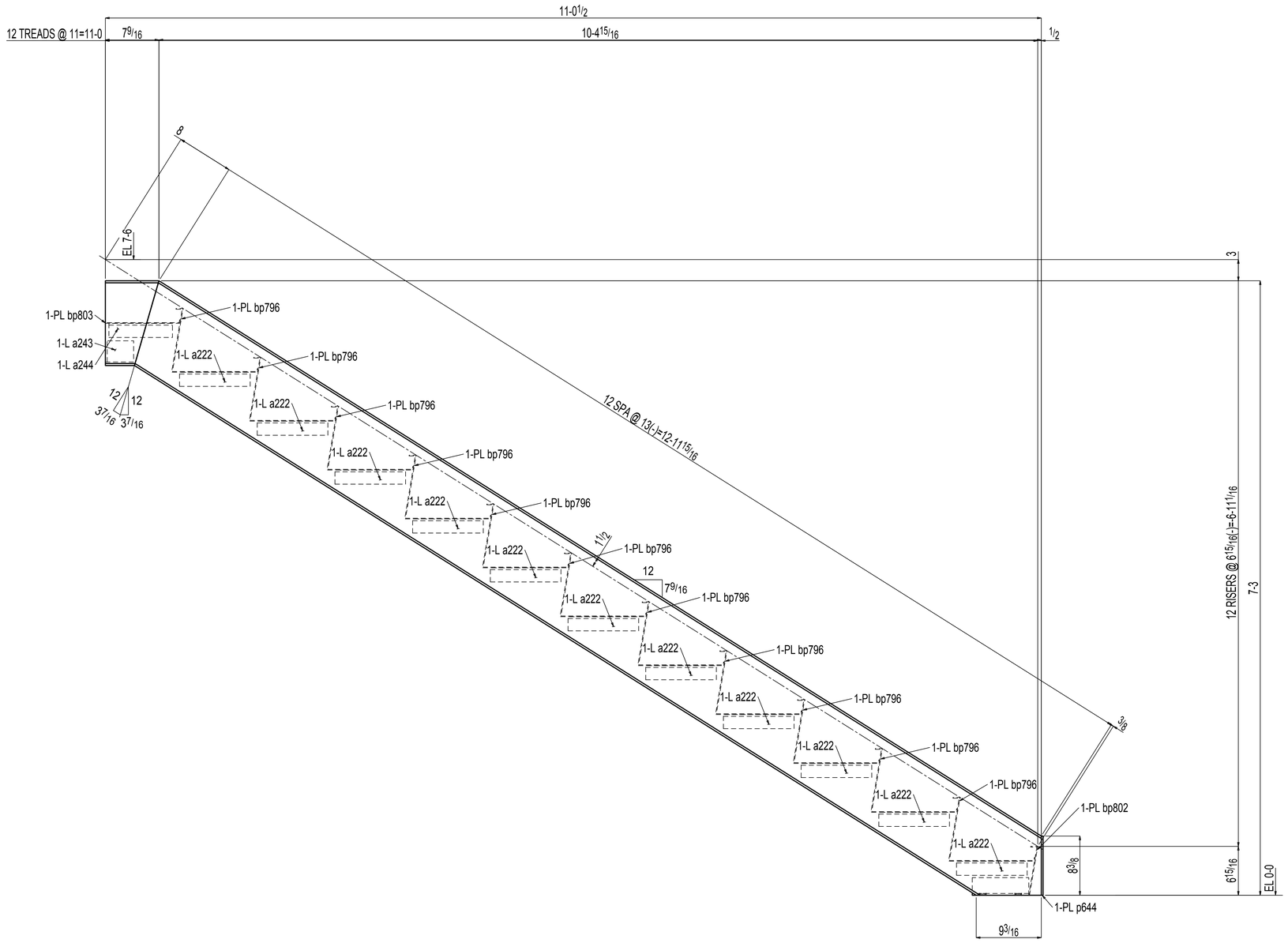

BILL OF MATERIAL

NO.	SECTION	FIT.	IN.	TEMP MARK	SHIPPING MARK	WEIGHT UNIT	WEIGHT TOTAL	REMARKS
ONE	STAIR				67S1	733	733	
1	MC12x10.6	0	7 9/16	67S1L0		7	7	A36
1	MC12x10.6	0	7 9/16	67S1R0		7	7	A36
1	MC12x10.6	12	11 1/8	67S1L		137	137	A36
1	MC12x10.6	12	11 1/8	67S1R		137	137	A36
2	L4x4x1/4	0	3	a243		2	3	A36
2	L4x3x1/4	0	8	a250		4	8	A36
22	L2x2x1/4	0	10	a222		3	58	A36
2	L2x2x1/4	0	9	a244		2	5	A36
2	PL 1/4x1 1/2	0	8 3/8	p644		1	2	A36
11	BPL12GAx22 1/2	4	0	bp796		32	352	BENT A36
1	BPL12GAx10 5/8	4	0	bp803		15	15	BENT A36
1	BPL12GAx1 1/4	4	0	bp802		2	2	BENT A36
	FIELD BOLTS							
4	3/4 Dia HILTI K	0	5 1/2					

TOTAL WEIGHT THIS DRAWINGS:777

ONE STAIR 67S1

PAINT: ONE SHOP COAT OF GRAY PRIMER

OPEN HOLES: 13/16" DIA (UNO) OPEN SLOTS: 13/16x1 DIA (UNO) BOLT: 3/4" DIA A325(UNO) EDGE DIST: 1 1/2"(UNO)

MATERIAL	
WIDE FLANGE	A992 (UNO)
PIPE	A53B (UNO)
TUBE	A500B (UNO)
CHANNEL	A36 (UNO)
PLATE,ANGLE,BAR	A36 (UNO)

THESE SHOP AND ERECTION DRAWINGS ARE AND SHALL REMAIN THE PROPERTY OF MODERN MACHINE SHOP, INC. THESE SHALL NOT BE USED, REPRODUCED, MODIFIED, OR COPIED IN ANY FORM OR MANNER WITHOUT THE EXPRESS, WRITTEN PERMISSION, CONSENT, AND DUE COMPENSATION TO THE FABRICATOR:
MODERN MACHINE SHOP, INC., COPYRIGHT 2013

NOTICE TO CONTRACTORS AND/OR ERECTORS

MODERN MACHINE SHOP, INC. WILL NOT ACCEPT BACKCHARGERS FOR CORRECTIVE WORK OR REPLACED MATERIALS UNLESS AUTHORIZED AND APPROVED. FAILURE TO COMPLY WITH THIS REQUIREMENT WILL BECOME CONTRACTORS/ERECTORS LIABILITY. ANY QUESTIONS CALL (866) 722-4656

DATE: _____ SIGNATURE: _____

REF:E24 THRU E39

ALL RUNNING DIMENSIONS FROM END OF MAIN MATERIAL.
ALL VERTICAL SPACING OF HOLES TO BE 3"UNLESS NOTED.
ALL SNIPS TO BE 3/8 X 3/8 UNLESS NOTED.
ALL COPES TO BE RADIUSED.
⊗ DENOTES "CONTACT SURFACE"THIS SIDE OF PLATE.
HOLES IN END PLATES AND OUTSTANDING LEGS OF END CLIPS
X INDICATES LAYOUT MARK FOR FABRICATION
LD=LW DTI HD=FLT WASHER FL=WROUGHT WASHER
MEMBERS ARE TO BE ERECTED SO THAT MARKED END IS IN SAME LACATION AS ON ERECTION DRAWING NO.

NO.	DATE	DESCRIPTION

REV.

CUSTOMER: _____
ARCHITECT: _____
PROJECT: _____
LOCATION: _____

DRWN _____	DATE _____	FOR APPL. _____	ORDER NO. _____
CHKD _____	DATE _____	TO SHOP _____	REV. A DWG. 67

BILL OF MATERIAL

NO.	SECTION	FIT.	IN.	TEMP MARK	SHIPPING MARK	WEIGHT UNIT	WEIGHT TOTAL	REMARKS
ONE	STAIR				69S1	417	417	
1	MC12x10.6	6	2 1/16	69S1L		65	65	A36
1	MC12x10.6	6	2 1/16	69S1R		65	65	A36
1	MC12x10.6	0	7 9/16	69S1L1		7	7	A36
1	MC12x10.6	0	8 9/16	69S1R1		8	8	A36
2	L4x3x1/4	0	8	a250		4	8	A36
11	L2x2x1/4	0	10	a222		3	29	A36
1	L2x2x1/4	0	9	a244		2	2	A36
2	PL1/4x11/2	0	8 3/8	p644		1	2	A36
5	BPL12GAx22 1/2	4	10 1/2	bp8		39	195	BENT A36
1	BPL12GAx11 5/8	4	10 1/2	bp718		20	20	BENT A36
1	BPL12GAx8 7/8	4	10 1/2	bp9		15	15	BENT A36
	FIELD BOLTS							
4	3/4 Dia HILTI KWIK	0	5					

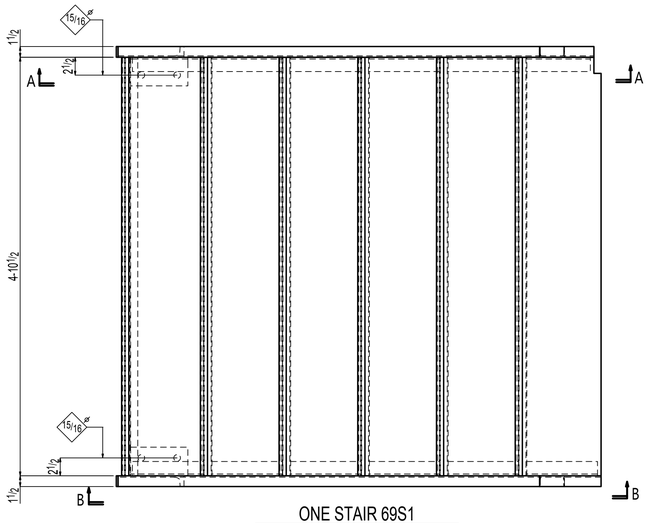

ONE STAIR 69S1

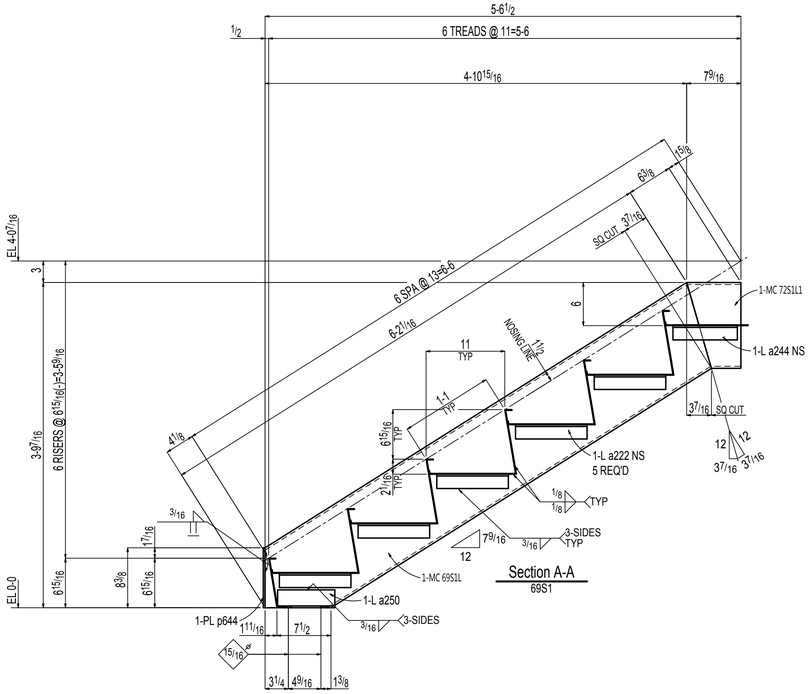

TOTAL WEIGHT THIS DRAWINGS:417

PAINT: ONE SHOP COAT OF GRAY PRIMER

OPEN HOLES: 13/16" DIA (UNO) OPEN SLOTS: 13/16x1 DIA (UNO) BOLT: 3/4" DIA A325(UNO) EDGE DIST: 1 1/2"(UNO)

MATERIAL	
WIDE FLANGE	A992 (UNO)
PIPE	A53B (UNO)
TUBE	A500B (UNO)
CHANNEL	A36 (UNO)
PLATE,ANGLE,BAR	A36 (UNO)

REF:E24 THRU E39

ALL RUNNING DIMENSIONS FROM END OF MAIN MATERIAL.
ALL VERTICAL SPACING OF HOLES TO BE 3"UNLESS NOTED.
ALL SNIPS TO BE 3/4 X 3/4 UNLESS NOTED.
ALL COPES TO BE RADIUSED.
⊗ DENOTES "CONTACT SURFACE"THIS SIDE OF PLATE.
HOLES IN END PLATES AND OUTSTANDING LEGS OF END CLIPS
X INDICATES LAYOUT MARK FOR FABRICATION
LD-LW DTI HD-FLT WASHER FL-WROUGHT WASHER
MEMBERS ARE TO BE ERECTED SO THAT MARKED END IS
IN SAME LACATION AS ON ERECTION DRAWING NO.

NOTICE TO CONTRACTORS AND/OR ERECTORS

MODERN MACHINE SHOP, INC. WILL NOT ACCEPT BACKCHARGERS FOR CORRECTIVE WORK OR REPLACED MATERIALS UNLESS AUTHORIZED AND APPROVED. FAILURE TO COMPLY WITH THIS REQUIREMENT WILL BECOME CONTRACTORS/ERECTORS LIABILITY. ANY QUESTIONS CALL (956) 722-4556

DATE: _____ SIGNATURE: _____

THESE SHOP AND ERECTION DRAWINGS ARE AND SHALL REMAIN THE PROPERTY OF MODERN MACHINE SHOP, INC. THESE SHALL NOT BE USED, REPRODUCED, MODIFIED, OR COPIED IN ANY FORM OR MANNER WITHOUT THE EXPRESS, WRITTEN PERMISSION, CONSENT, AND DUE COMPENSATION TO THE FABRICATOR:
MODERN MACHINE SHOP, INC., COPYRIGHT 2013

NO.	DATE	BY	DESCRIPTION

REV.

CUSTOMER: _____
ARCHITECT: _____
PROJECT: _____
LOCATION: _____

DRWN KB DATE _____ FOR APPL. _____
CHKD MJB DATE _____ TO SHOP _____

ORDER NO. _____
REV. 0 DWG. 69

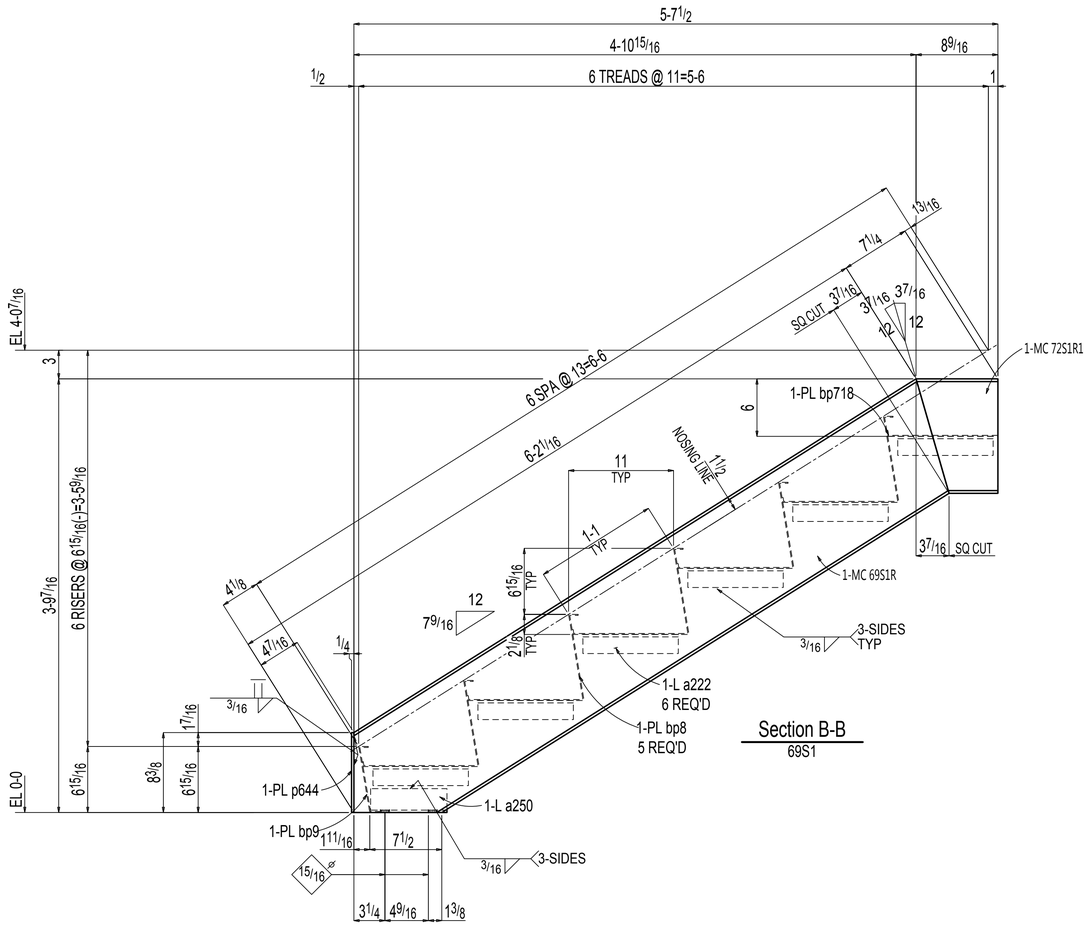

TOTAL WEIGHT THIS DRAWINGS:417

PAINT: ONE SHOP COAT OF GRAY PRIMER

OPEN HOLES: 13/16" DIA (UNO) OPEN SQ.TS: 13/16x1 DIA (UNO) BOLT: 3/4" DIA A325(UNO) EDGE DIST: 1 1/2"(UNO)

MATERIAL	
WIDE FLANGE	A992 (UNO)
PIPE	A53B (UNO)
TUBE	A500B (UNO)
CHANNEL	A36 (UNO)
PLATE,ANGLE,BAR	A36 (UNO)

THESE SHOP AND ERECTION DRAWINGS ARE AND SHALL REMAIN THE PROPERTY OF MODERN MACHINE SHOP, INC. THESE SHALL NOT BE USED, REPRODUCED, MODIFIED, OR COPIED IN ANY FORM OR MANNER WITHOUT THE EXPRESS, WRITTEN PERMISSION, CONSENT, AND DUE COMPENSATION TO THE FABRICATOR:
MODERN MACHINE SHOP, INC., COPYRIGHT 2013

NOTICE TO CONTRACTORS AND/OR ERECTORS

MODERN MACHINE SHOP, INC. WILL NOT ACCEPT BACKCHARGERS FOR CORRECTIVE WORK OR REPLACED MATERIALS UNLESS AUTHORIZED AND APPROVED. FAILURE TO COMPLY WITH THIS REQUIREMENT WILL BECOME CONTRACTORS/ERECTORS LIABILITY. ANY QUESTIONS CALL (956) 722-4656

DATE: _____ SIGNATURE: _____

REF:E24 THRU E39

ALL RUNNING DIMENSIONS FROM END OF MAIN MATERIAL.
ALL VERTICAL SPACING OF HOLES TO BE 3"UNLESS NOTED.
ALL SNIPS TO BE 3/4 X 3/4 UNLESS NOTED.
ALL COPES TO BE RADIUSED.
⊗ DENOTES "CONTACT SURFACE"THIS SIDE OF PLATE.
HOLES IN END PLATES AND OUTSTANDING LEGS OF END CLIPS
X INDICATES LAYOUT MARK FOR FABRICATION
LD-LW,DTI HD-FLT WASHER FL=WROUGHT WASHER
MEMBERS ARE TO BE ERECTED SO THAT MARKED END IS IN SAME LACATION AS ON ERECTION DRAWING NO.

NO	DATE	BY	DESCRIPTION

REV.

CUSTOMER: _____
ARCHITECT: _____
PROJECT: _____
LOCATION: _____

DRWN _____	DATE _____	FOR APPL. _____	ORDER NO. _____
CHKD _____	DATE _____	TO SHOP _____	REV. 0 DWG. 69A

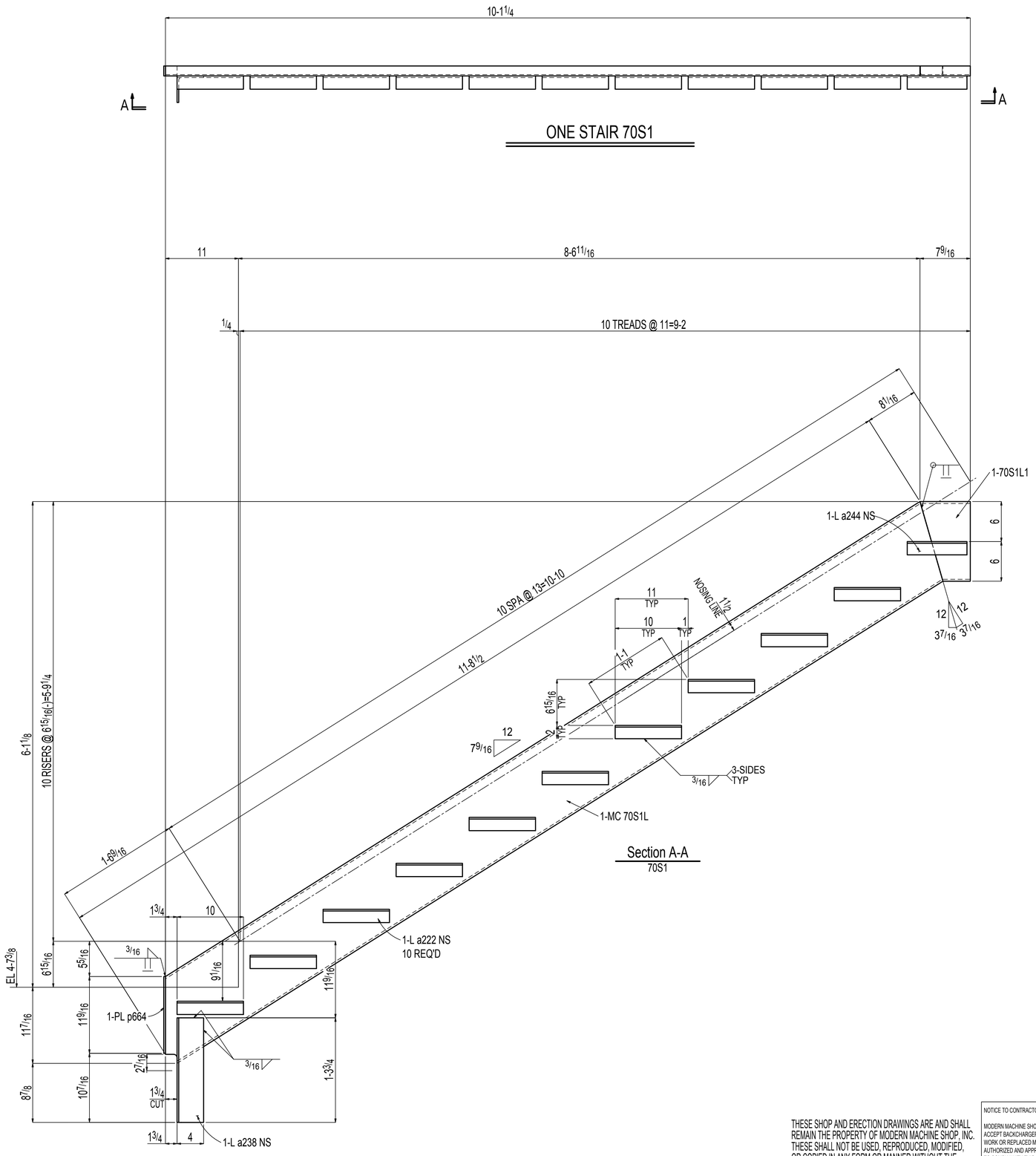

BILL OF MATERIAL

NO.	SECTION	FIT.	IN.	TEMP MARK	SHIPPING MARK	WEIGHT UNIT	WEIGHT TOTAL	REMARKS
ONE	STAIR				70S1	170	170	
1	MC12x10.6	0	7 9/16	70S1L1		7	7	A36
1	MC12x10.6	11	8 9/16	70S1L		124	124	A36
1	L4x4x1/4	1	3 3/4	a238		9	9	A36
10	L2x2x1/4	0	10	a222		3	27	A36
1	L2x2x1/4	0	9	a244		2	2	A36
1	PL1/4x1 1/2	0	11 9/16	p664		1	1	A36

TOTAL WEIGHT THIS DRAWINGS:157

THESE SHOP AND ERECTION DRAWINGS ARE AND SHALL REMAIN THE PROPERTY OF MODERN MACHINE SHOP, INC. THESE SHALL NOT BE USED, REPRODUCED, MODIFIED, OR COPIED IN ANY FORM OR MANNER WITHOUT THE EXPRESS, WRITTEN PERMISSION, CONSENT, AND DUE COMPENSATION TO THE FABRICATOR:
MODERN MACHINE SHOP, INC., COPYRIGHT 2013

NOTICE TO CONTRACTORS AND/OR ERECTORS

MODERN MACHINE SHOP, INC. WILL NOT ACCEPT BACKCHARGERS FOR CORRECTIVE WORK OR REPLACED MATERIALS UNLESS AUTHORIZED AND APPROVED. FAILURE TO COMPLY WITH THIS REQUIREMENT WILL BECOME CONTRACTORS/ERECTORS LIABILITY. ANY QUESTIONS CALL (956) 722-4556

DATE: _____ SIGNATURE: _____

MATERIAL	
WIDE FLANGE	A992 (UNO)
PIPE	A53B (UNO)
TUBE	A500B (UNO)
CHANNEL	A36 (UNO)
PLATE,ANGLE,BAR	A36 (UNO)

REF:E24 THRU E39

ALL RUNNING DIMENSIONS FROM END OF MAIN MATERIAL.
ALL VERTICAL SPACING OF HOLES TO BE 3"UNLESS NOTED.
ALL SNIPS TO BE 3/8 X 3/8 UNLESS NOTED.
ALL COPES TO BE RADIUSED.
⊗ DENOTES "CONTACT SURFACE"THIS SIDE OF PLATE.
HOLES IN END PLATES AND OUTSTANDING LEGS OF END CLIPS
X INDICATES LAYOUT MARK FOR FABRICATION
LD=LW DTI HD=FLT WASHER FL=WROUGHT WASHER
MEMBERS ARE TO BE ERECTED SO THAT MARKED END IS IN SAME LACATION AS ON ERECTION DRAWING NO.

NO	DATE	BY	DESCRIPTION

REV.

PAINT: ONE SHOP COAT OF GRAY PRIMER
OPEN HOLES: 13/16" DIA (UNO) OPEN SLOTS: 13/16x1 DIA (UNO) BOLT: 3/4" DIA A325(UNO) EDGE DIST: 1 1/2"(UNO)

CUSTOMER: _____
ARCHITECT: _____
PROJECT: _____
LOCATION: _____

DRWN _____ DATE _____ FOR APPL _____
CHKD _____ DATE _____ TO SHOP _____

ORDER NO. _____
REV. 0 DWG. 70

BILL OF MATERIAL

NO.	SECTION	FIT.	IN.	TEMP MARK	SHIPPING MARK	WEIGHT UNIT	WEIGHT TOTAL	REMARKS
ONE	STAIR				71S1	122	122	
1	MC12x10.6	0	7 9/16	71S1L0		7	7	A36
1	MC12x10.6	7	6 7/16	71S1L		80	80	A36
1	L4x4x1/4	0	7 5/8	a432		4	4	A36
1	L4x4x1/4	0	3	a243		2	2	A36
1	L2x2x1/4	0	11 7/8	a438		3	3	A36
5	L2x2x1/4	0	10	a222		3	13	A36
1	L2x2x1/4	0	9	a244		2	2	A36
1	MC12x10.6	0	10 1/16	c137		9	9	A36
1	PL1/4x1 1/2	1	2 3/16	p665		2	2	A36

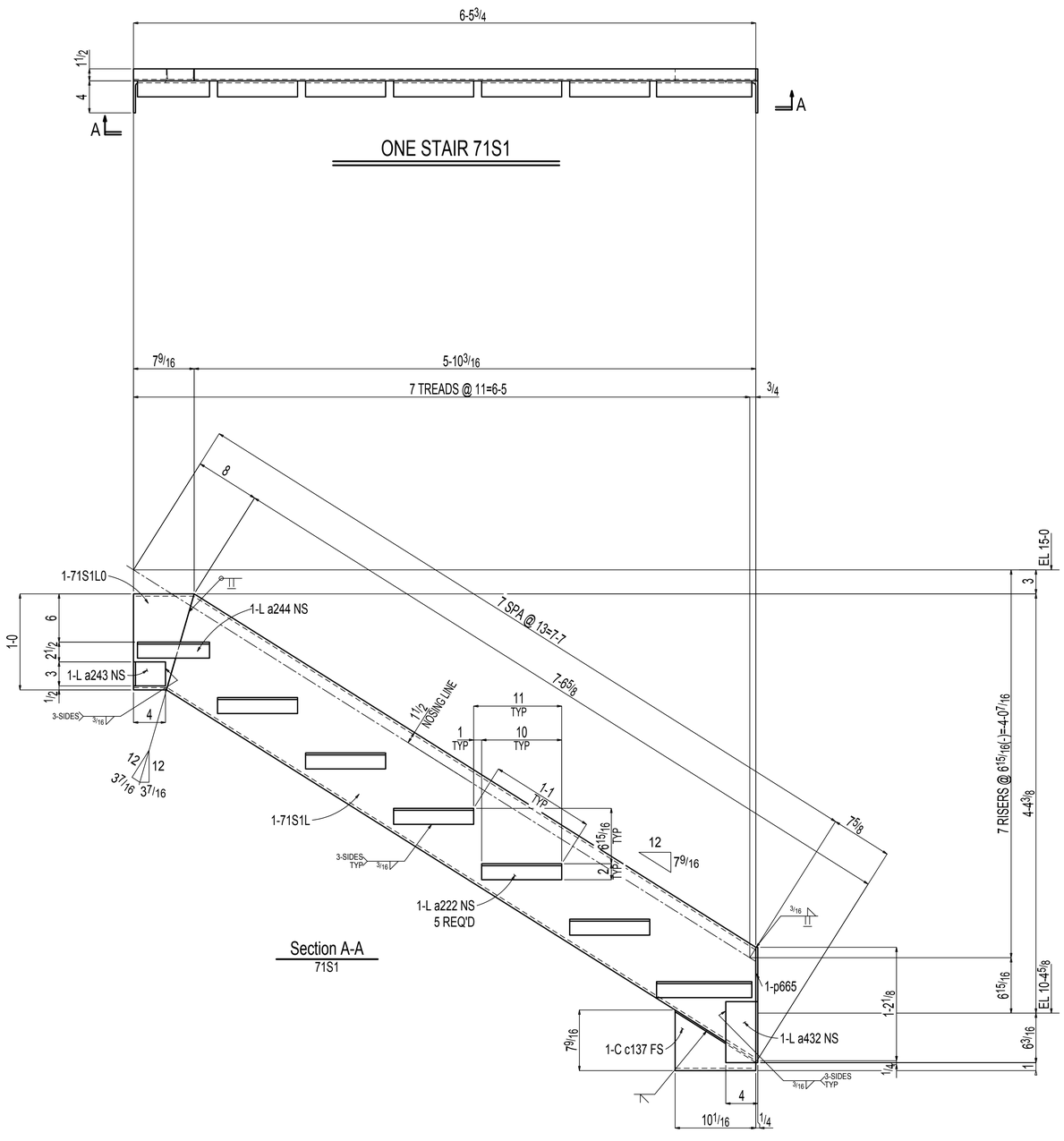

TOTAL WEIGHT THIS DRAWINGS:118

PAINT: ONE SHOP COAT OF GRAY PRIMER

OPEN HOLES: 13/32" DIA (UNO) OPEN SLTS: 13/32x1 DIA (UNO) BOLT: 3/4" DIA A325(UNO) EDGE DIST. 1 1/2"(UNO)

MATERIAL	
WIDE FLANGE	A992 (UNO)
PIPE	A53B (UNO)
TUBE	A500B (UNO)
CHANNEL	A36 (UNO)
PLATE,ANGLE,BAR	A36 (UNO)

REF:E24 THRU E39

ALL RUNNING DIMENSIONS FROM END OF MAIN MATERIAL.
ALL VERTICAL SPACING OF HOLES TO BE 3"UNLESS NOTED.
ALL SNIPS TO BE 3/4 X 3/4 UNLESS NOTED.
ALL COPES TO BE RADIUSED.
⊗ DENOTES "CONTACT SURFACE"THIS SIDE OF PLATE.
HOLES IN END PLATES AND OUTSTANDING LEGS OF END CLIPS
X INDICATES LAYOUT MARK FOR FABRICATION.
LD=LIW,DTI HD=FLT WASHER FL=WROUGHT WASHER
MEMBERS ARE TO BE ERECTED SO THAT MARKED END IS IN SAME LACATION AS ON ERECTION DRAWING NO.

NO.	DATE	BY	DESCRIPTION

REV.

THESE SHOP AND ERECTION DRAWINGS ARE AND SHALL REMAIN THE PROPERTY OF MODERN MACHINE SHOP, INC. THESE SHALL NOT BE USED, REPRODUCED, MODIFIED, OR COPIED IN ANY FORM OR MANNER WITHOUT THE EXPRESS, WRITTEN PERMISSION, CONSENT, AND DUE COMPENSATION TO THE FABRICATOR:
MODERN MACHINE SHOP, INC., COPYRIGHT 2013

NOTICE TO CONTRACTORS AND/OR ERECTORS

MODERN MACHINE SHOP, INC. WILL NOT ACCEPT BACKCHARGERS FOR CORRECTIVE WORK OR REPLACED MATERIALS UNLESS AUTHORIZED AND APPROVED. FAILURE TO COMPLY WITH THIS REQUIREMENT WILL BECOME CONTRACTORS/ERECTORS LIABILITY. ANY QUESTIONS CALL (955) 722-4656

DATE: _____ SIGNATURE: _____

CUSTOMER:
ARCHITECT:
PROJECT:
LOCATION:

DRWN	DATE	FOR APPL.	ORDER NO.
CHKD	DATE	TO SHOP	REV. 0 DWG. 71

BILL OF MATERIAL

NO.	SECTION	FIT.	IN.	TEMP MARK	SHIPPING MARK	WEIGHT UNIT	WEIGHT TOTAL	REMARKS
ONE	STAIR				72S1	170	170	
1	MC12x10.6	0	7 9/16	72S1R1		7	7	A36
1	MC12x10.6	11	8 9/16	72S1R		124	124	A36
1	L4x4x1/4	1	3 3/4	a238		9	9	A36
10	L2x2x1/4	0	10	a222		3	27	A36
1	L2x2x1/4	0	9	a244		2	2	A36
1	PL1/4x11/2	0	11 9/16	p664		1	1	A36

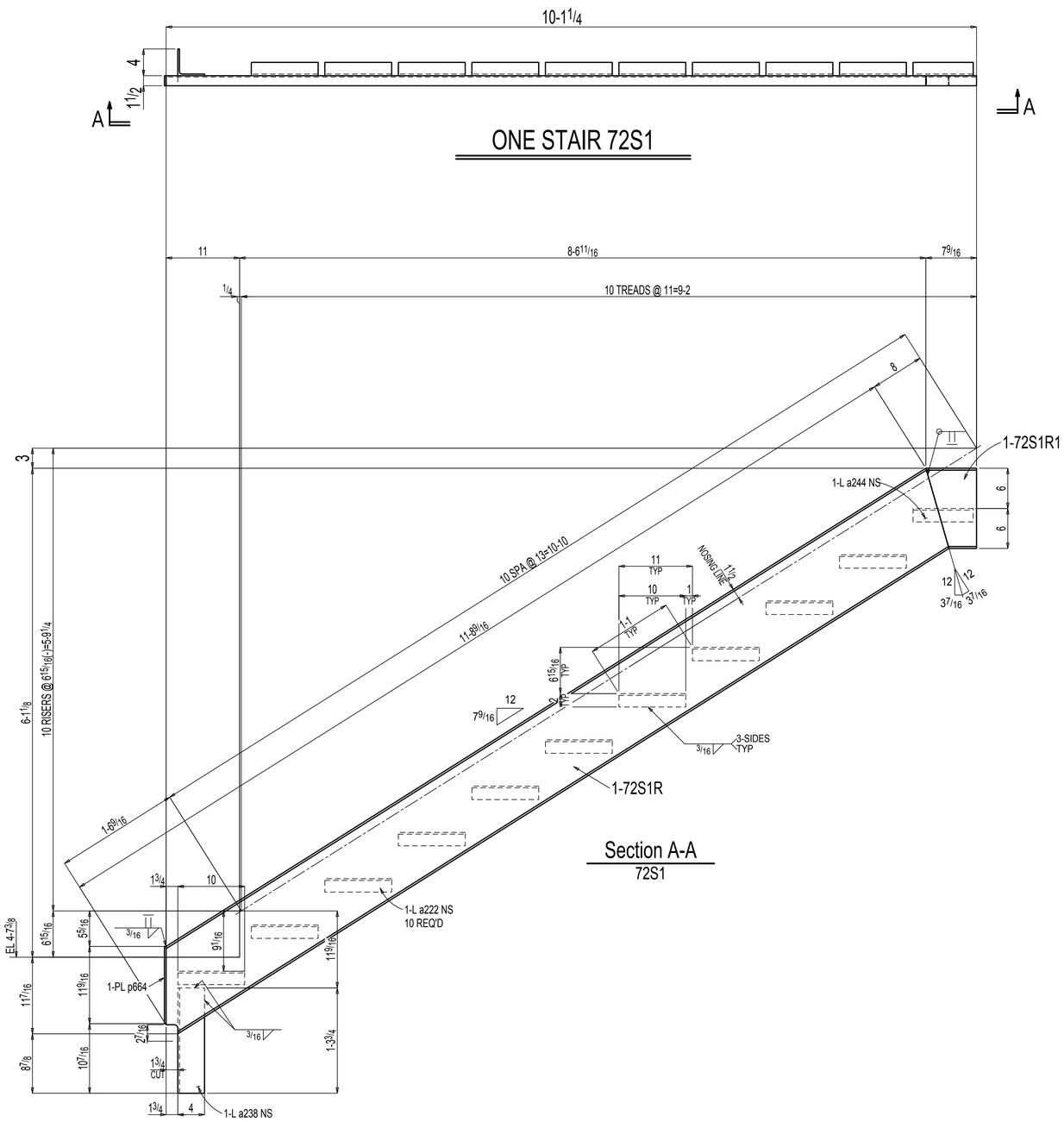

Section A-A
72S1

TOTAL WEIGHT THIS DRAWINGS:157

PAINT: ONE SHOP COAT OF GRAY PRIMER

OPEN HOLES: 13/16" DIA (UNO) OPEN SLOTS: 13/16x1 DIA (UNO) BOLT: 3/4" DIA A325(UNO) EDGE DIST: 1 1/2"(UNO)

MATERIAL	
WIDE FLANGE	A992 (UNO)
PIPE	A53B (UNO)
TUBE	A500B (UNO)
CHANNEL	A36 (UNO)
PLATE,ANGLE,BAR	A36 (UNO)

THESE SHOP AND ERECTION DRAWINGS ARE AND SHALL REMAIN THE PROPERTY OF MODERN MACHINE SHOP, INC. THESE SHALL NOT BE USED, REPRODUCED, MODIFIED, OR COPIED IN ANY FORM OR MANNER WITHOUT THE EXPRESS, WRITTEN PERMISSION, CONSENT, AND DUE COMPENSATION TO THE FABRICATOR:
MODERN MACHINE SHOP, INC., COPYRIGHT 2013

NOTICE TO CONTRACTORS AND/OR ERECTORS

MODERN MACHINE SHOP, INC. WILL NOT ACCEPT BACKCHARGERS FOR CORRECTIVE WORK OR REPLACED MATERIALS UNLESS AUTHORIZED AND APPROVED. FAILURE TO COMPLY WITH THIS REQUIREMENT WILL BECOME CONTRACTORS/ERECTORS LIABILITY. ANY QUESTIONS CALL (956) 722-4556

DATE: _____ SIGNATURE: _____

REF:E24 THRU E39

ALL RUNNING DIMENSIONS FROM END OF MAIN MATERIAL.
ALL VERTICAL SPACING OF HOLES TO BE 3"UNLESS NOTED.
ALL SNIPS TO BE 3/4 X 3/4 UNLESS NOTED.
ALL COPES TO BE RADIUSED.
⊗ DENOTES "CONTACT SURFACE"THIS SIDE OF PLATE.
HOLES IN END PLATES AND OUTSTANDING LEGS OF END CLIPS
X INDICATES LAYOUT MARK FOR FABRICATION
LD=LIW,DTI HD=FLT WASHER FL=WROUGHT WASHER
MEMBERS ARE TO BE ERECTED SO THAT MARKED END IS IN SAME LACATION AS ON ERECTION DRAWING NO.

NO.	DATE	BY	DESCRIPTION

REV.

CUSTOMER: _____
ARCHITECT: _____
PROJECT: _____
LOCATION: _____

DRWN _____	DATE _____	FOR APPL. _____	ORDER NO. _____
CHKD _____	DATE _____	TO SHOP _____	REV. 0 DWG. 72

BILL OF MATERIAL

NO.	SECTION	FIT.	IN.	TEMP MARK	SHIPPING MARK	WEIGHT UNIT	WEIGHT TOTAL	REMARKS
ONE	STAIR				73S1	122	122	
1	MC12x10.6	0	7 9/16	73S1R0		7	7	A36
1	MC12x10.6	7	6 7/16	73S1R		80	80	A36
1	L4x4x1/4	0	7 5/8	a432		4	4	A36
1	L4x4x1/4	0	3	a243		2	2	A36
1	L2x2x1/4	0	11 7/8	a438		3	3	A36
5	L2x2x1/4	0	10	a222		3	13	A36
1	L2x2x1/4	0	9	a244		2	2	A36
1	MC12x10.6	0	10 1/16	c139		9	9	A36
1	PL1/4x1 1/2	1	2 3/16	p665		2	2	A36

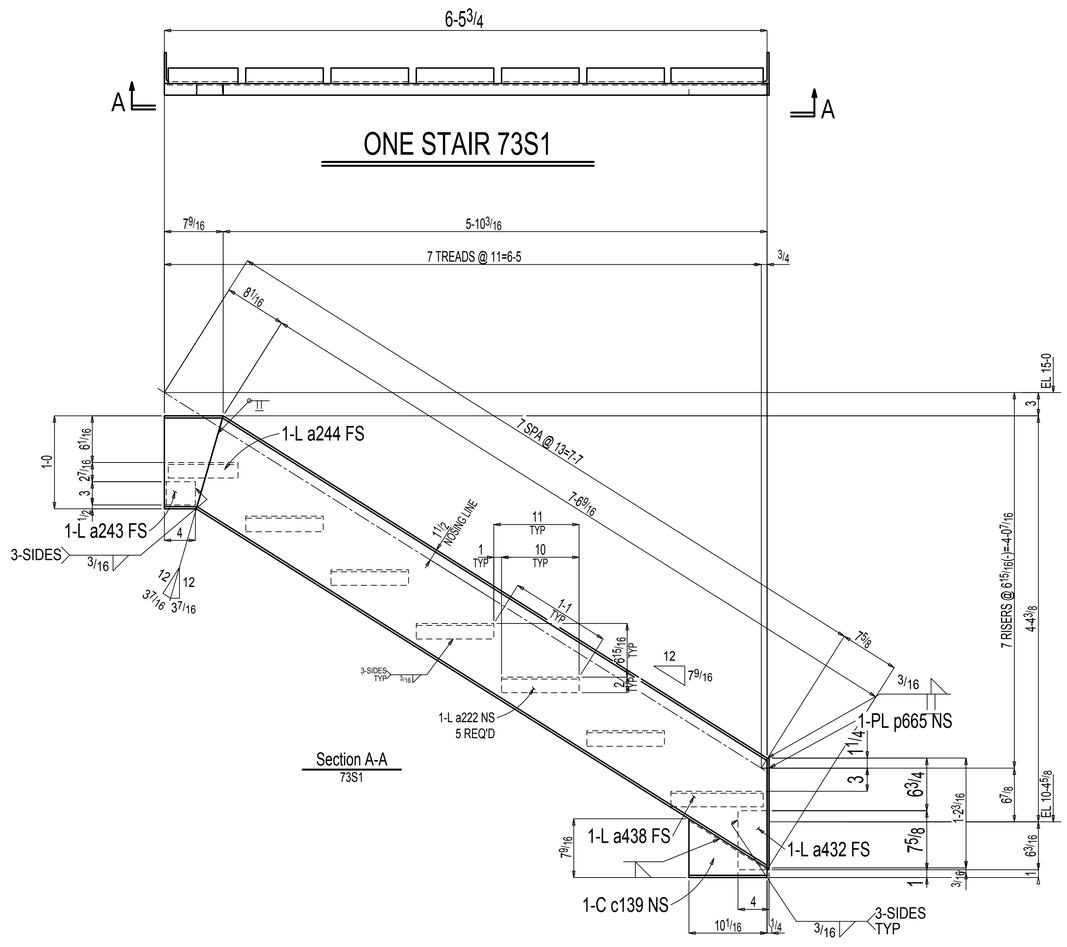

TOTAL WEIGHT THIS DRAWINGS:118

PAINT: ONE SHOP COAT OF GRAY PRIMER

OPEN HOLES: 13/16" DIA (UNO) OPEN SLOTS: 13/16x1 DIA (UNO) BOLT: 3/4" DIA A325(UNO) EDGE DIST: 1 1/2"(UNO)

MATERIAL	
WIDE FLANGE	A992 (UNO)
PIPE	A53B (UNO)
TUBE	A500B (UNO)
CHANNEL	A36 (UNO)
PLATE,ANGLE,BAR	A36 (UNO)

REF:E24 THRU E39

ALL RUNNING DIMENSIONS FROM END OF MAIN MATERIAL.
ALL VERTICAL SPACING OF HOLES TO BE 3"UNLESS NOTED.
ALL SNIPS TO BE 3/8 X 3/4 UNLESS NOTED.
ALL COPES TO BE RADIUSED.
⊗ DENOTES "CONTACT SURFACE"THIS SIDE OF PLATE.
HOLES IN END PLATES AND OUTSTANDING LEGS OF END CLIPS
X INDICATES LAYOUT MARK FOR FABRICATION
LD-LW,DTI HD=FLT WASHER FL=WROUGHT WASHER
MEMBERS ARE TO BE ERECTED SO THAT MARKED END IS
IN SAME LACATION AS ON ERECTION DRAWING NO.

NO	DATE	BY	DESCRIPTION

REV.

NOTICE TO CONTRACTORS AND/OR ERECTORS

MODERN MACHINE SHOP, INC. WILL NOT ACCEPT BACKCHARGERS FOR CORRECTIVE WORK OR REPLACED MATERIALS UNLESS AUTHORIZED AND APPROVED. FAILURE TO COMPLY WITH THIS REQUIREMENT WILL BECOME CONTRACTORS/ERECTORS LIABILITY. ANY QUESTIONS CALL (956) 722-4656

DATE: _____ SIGNATURE: _____

THESE SHOP AND ERECTION DRAWINGS ARE AND SHALL REMAIN THE PROPERTY OF MODERN MACHINE SHOP, INC. THESE SHALL NOT BE USED, REPRODUCED, MODIFIED, OR COPIED IN ANY FORM OR MANNER WITHOUT THE EXPRESS, WRITTEN PERMISSION, CONSENT, AND DUE COMPENSATION TO THE FABRICATOR:
MODERN MACHINE SHOP, INC., COPYRIGHT 2013

CUSTOMER:
ARCHITECT:
PROJECT:
LOCATION:

DRWN	DATE	FOR APPL.	ORDER NO.
CHKD	DATE	TO SHOP	REV. 0 DWG. 73

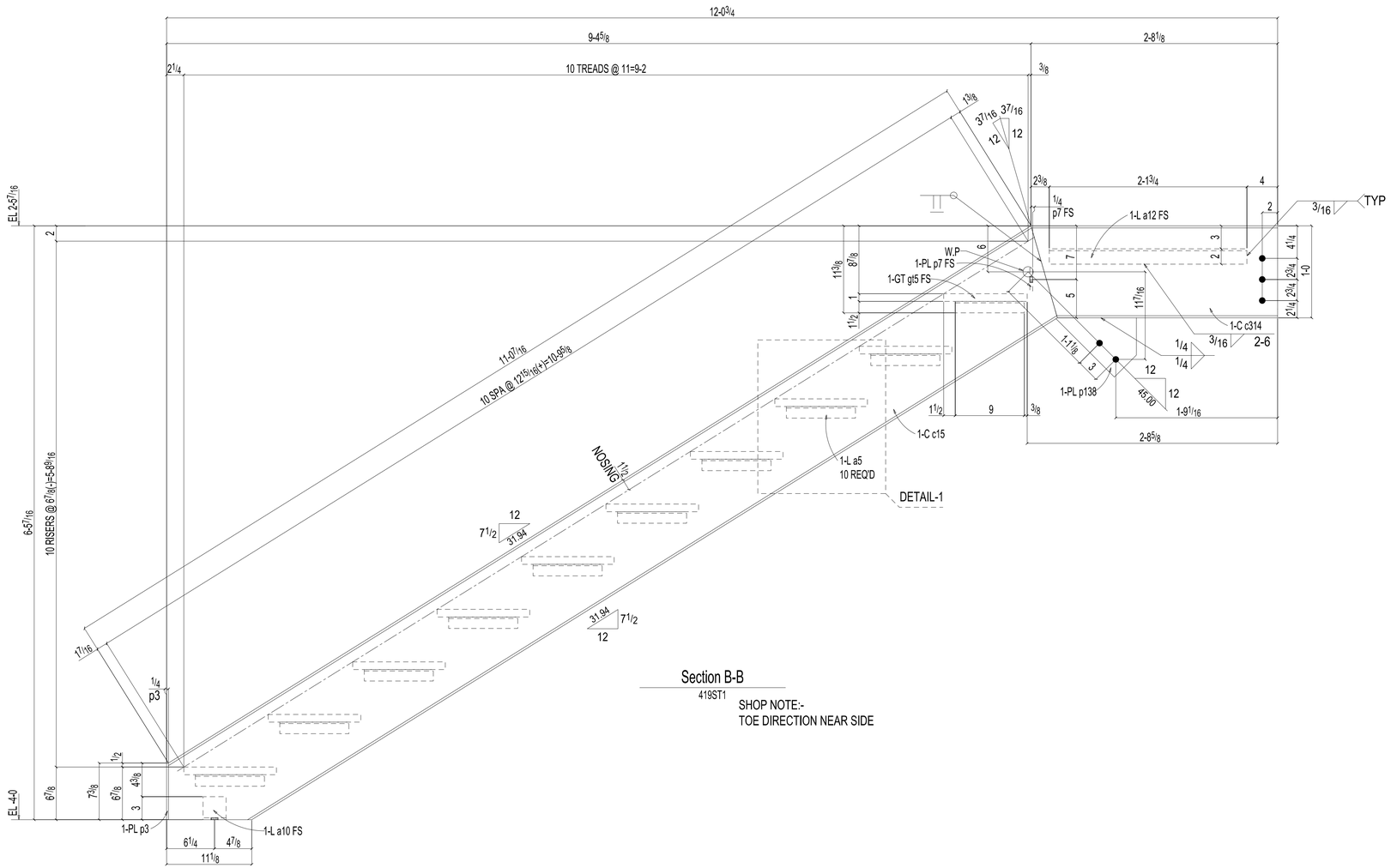

Section B-B

419ST1

SHOP NOTE:-
TOE DIRECTION NEAR SIDE

FOR APPROVAL

APPROVER PLEASE NOTE
ANY VERIFY NOTES NOT
RESPONDED TO ON RETURNED
PRINTS WILL BE TAKEN
AS APPROVED.

825 WREN ROAD, GOODLETTSVILE, TN 37072 (615) 859-5600

PAINT:ONE SHOP COAT OF RUST-INHIBITING PRIMER U.N.
SURFACE PREP: SSPC-SP2

ALL ELECTRODES TO BE E70XX U.N.
ALL WELDS TO BE 3/16 FILLET x CONT. U.N.O.
ALL HOLES TO BE 13/16" U.N.
ALL PIPE TO BE ASTM-A53 U.N.
ALL TUBE TO BE ASTM-A500 U.N.
ALL SHAPES, PLATES, & BARS TO BE ASTM-A36 UNLESS NOTED
VERTICAL EDGE DISTANCE ON SHEAR TABS= 1 1/2" U.N.
VERTICAL EDGE DISTANCE ON CLIP ANGLES= 1 1/4" U.N.
ALL REENTRANT CUTS TO BE 1/2" RADIUS U.N.

REFER BOM THIS SHEET WITH 419 | REFER WORK THIS SHEET WITH 419

ISSUE RECORD				
REV.	DATE	FOR	PROJECT	PROJECT SE TENANT BUILDOUT
A	01-17-25	Approval	LOCATION	400 MADDOX ROAD MT. JULIET, TN
			DETAIL	STAIR DETAIL
			CONTRACTOR	
			ARCHITECT/ENGINEER	
			DWG: JAL DATE: 01-16-25	CHK'D: JAL DATE: 01-16-25
			PROJECT NO.	SHEET NO. 419.A

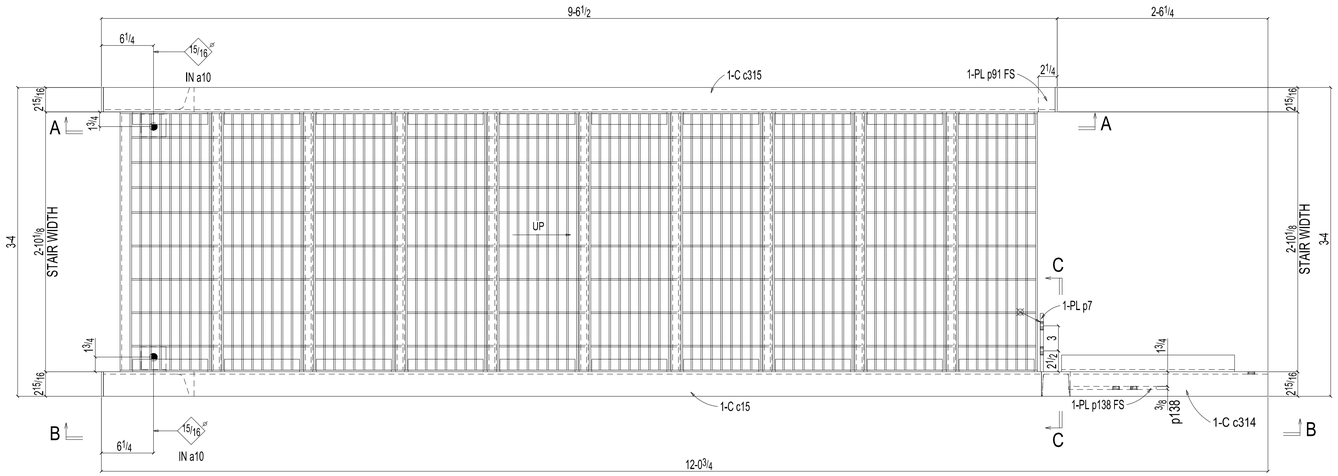

ONE STAIR 419ST1

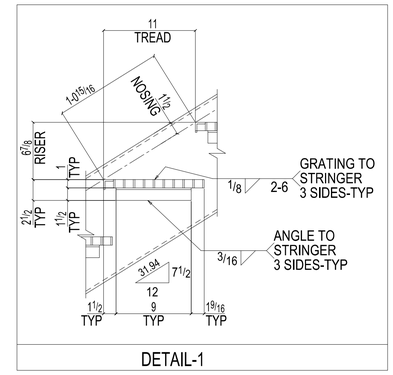

DETAIL-1

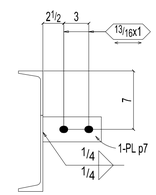

Section C-C
419ST1

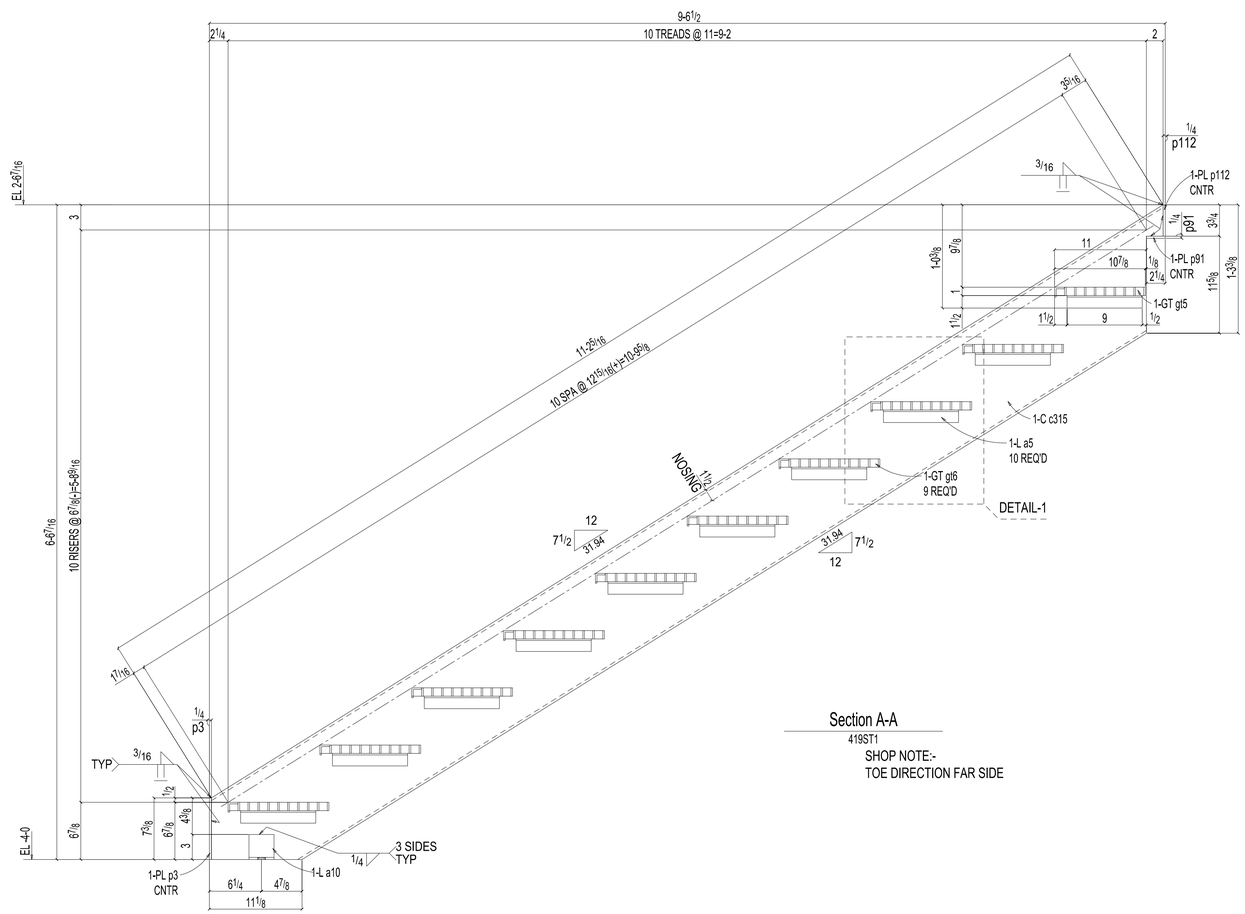

Section A-A
419ST1
SHOP NOTE:-
TOE DIRECTION FAR SIDE

BILL OF MATERIAL

LINE	QTY SHIP	QTY FAB	MARK	SHAPE	LENGTH FT.	LENGTH IN.	REMARKS	WEIGHT TOTAL
	ONE 419ST1			STAIR				852
	1		c15	C12x20.7	11	7 7/8	A36	241
	1		c315	C12x20.7	11	6 1/4	A36	238
	1		c314	C12x20.7	2	8 1/8	A36	55
	1		a12	L2x2x1/4	2	1 3/4	A36	7
	1		p138	PL3/8x7 3/4	0	10 1/2	A36	9
	2		a10	L3x3x1/4	0	3	A36	2
	20		a5	L1 1/2x1 1/2x3/16	0	9	A36	27
	1		p7	PL3/8x3	0	7	A36	2
	2		p3	PL1/4x2 15/16	0	7 3/8	A36	3
	1		p112	PL1/4x2 15/16	0	3 3/4	A36	1
	1		p91	PL1/4x2 1/4	0	2 15/16	A36	0
	9		gt6	(GT3/16X1)x12 11/16	2	10 1/8	19W4 A-1011	237
	1		gt5	(GT3/16X1)x10 7/8	2	10 1/8	19W4 A-1011	24
				FIELD BOLTS				
	2			3/4 Dia SCREW ANCHOR	0	7	KH-EZ	2
	3			TC 3/4 Dia A325N	0	1 3/4	+1HD WASH	2

Total weight : 852

FOR APPROVAL

PAINT:ONE SHOP COAT OF RUST-INHIBITING PRIMER U.N.
SURFACE PREP: SSPC-SP2

ALL ELECTRODES TO BE E70XX U.N.
ALL WELDS TO BE 3/16 FILLET x CONT. U.N.O.
ALL HOLES TO BE 13/16" U.N.
ALL PIPE TO BE ASTM-A53 U.N.
ALL TUBE TO BE ASTM-A500 U.N.
ALL SHAPES, PLATES, & BARS TO BE ASTM-A36 UNLESS NOTED
VERTICAL EDGE DISTANCE ON SHEAR TABS= 1 1/2" U.N.
VERTICAL EDGE DISTANCE ON CLIP ANGLES= 1 1/4" U.N.
ALL REENTRANT CUTS TO BE 1/2" RADIUS U.N.

REFER WORK THIS SHEET WITH 419.A

APPROVER PLEASE NOTE
ANY VERIFY NOTES NOT
RESPONDED TO ON RETURNED
PRINTS WILL BE TAKEN
AS APPROVED.

825 WREN ROAD, GOODLETTSVILE, TN 37072 (615) 859-5600

ISSUE RECORD				
REV.	DATE	FOR	PROJECT	PROJECT SE TENANT BUILDOUT
A	01-17-25	Approval	LOCATION	400 MADDOX ROAD MT. JULIET, TN
			DETAIL	STAIR DETAIL
			CONTRACTOR	
			ARCHITECT/ENGINEER	
			DWG: JAL DATE: 01-16-25	CHK'D: JAL DATE: 01-16-25
			PROJECT NO.	SHEET NO. 419

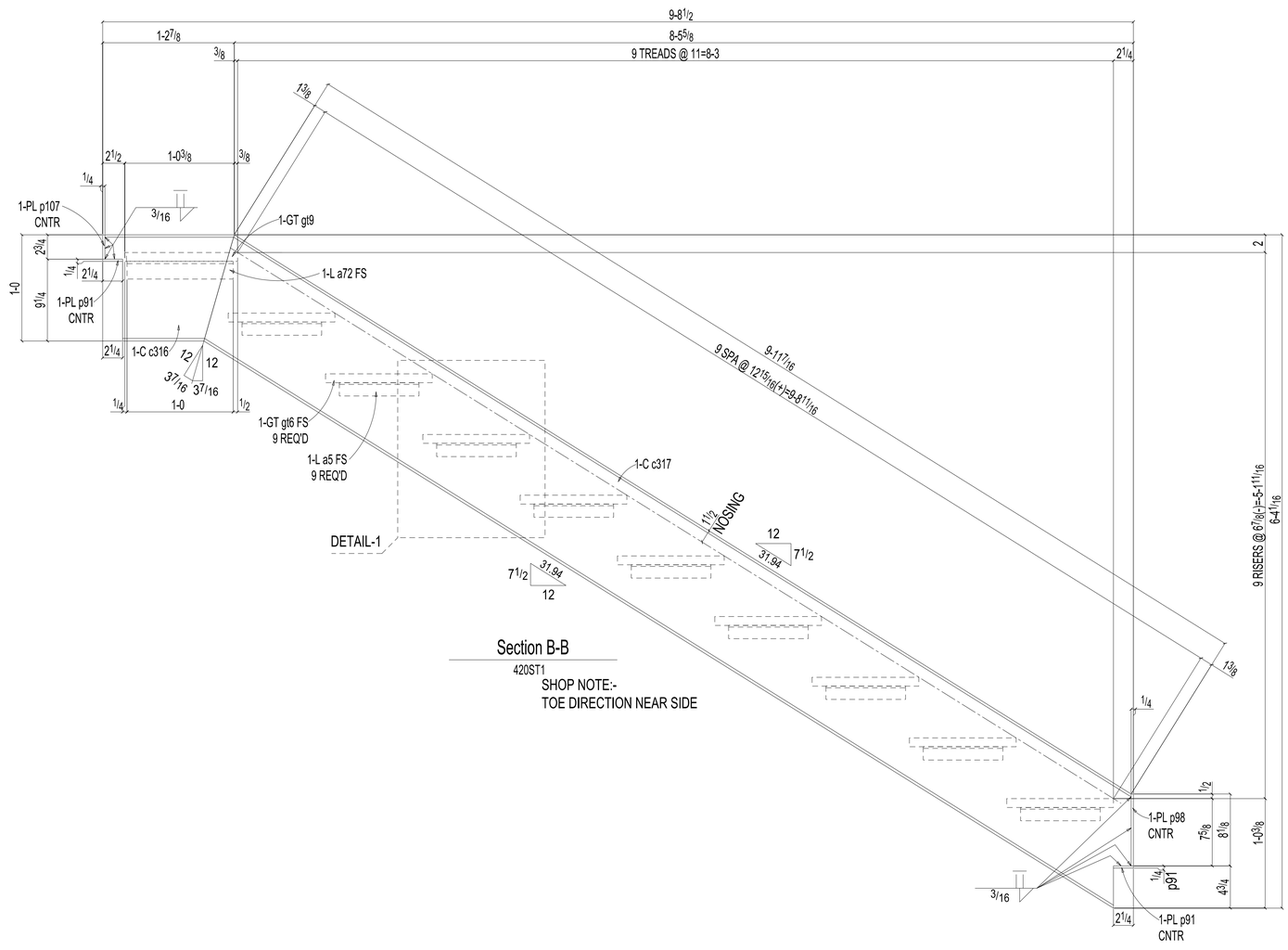

FOR APPROVAL

APPROVER PLEASE NOTE
ANY VERIFY NOTES NOT
RESPONDED TO ON RETURNED
PRINTS WILL BE TAKEN
AS APPROVED.

825 WREN ROAD, GOODLETTSVILE, TN 37072 (615) 859-5600

PAINT:ONE SHOP COAT OF RUST-INHIBITING PRIMER U.N.
SURFACE PREP: SSPC-SP2

ALL ELECTRODES TO BE E70XX U.N.
ALL WELDS TO BE 3/16 FILLET x CONT. U.N.O.
ALL HOLES TO BE 13/16" U.N.
ALL PIPE TO BE ASTM-A53 U.N.
ALL TUBE TO BE ASTM-A500 U.N.
ALL SHAPES, PLATES, & BARS TO BE ASTM-A36 UNLESS NOTED
VERTICAL EDGE DISTANCE ON SHEAR TABS= 1 1/2" U.N.
VERTICAL EDGE DISTANCE ON CLIP ANGLES= 1 1/4" U.N.
ALL REENTRANT CUTS TO BE 1/2" RADIUS U.N.

REFER BOM THIS SHEET WITH 420

REFER WORK THIS SHEET WITH 420

ISSUE RECORD				
REV.	DATE	FOR	PROJECT	PROJECT SE TENANT BUILDOUT
A	01-17-25	Approval	LOCATION	400 MADDOX ROAD MT. JULIET, TN
			DETAIL	STAIR DETAIL
			CONTRACTOR	
			ARCHITECT/ENGINEER	
			DWG: JAL DATE: 01-16-25	CHK'D: JAL DATE: 01-16-25
			PROJECT NO.	SHEET NO. 420.A

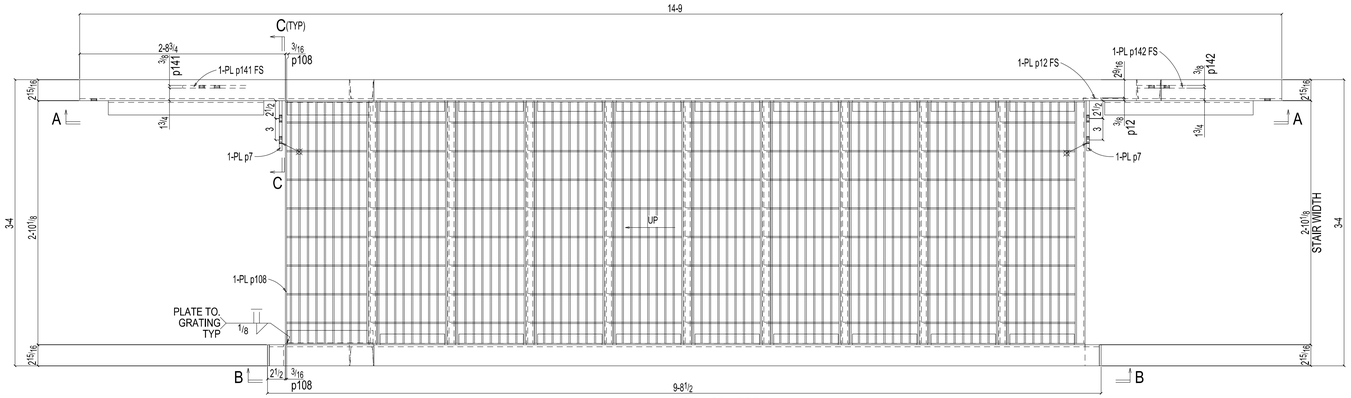

4 STAIRS 420ST1

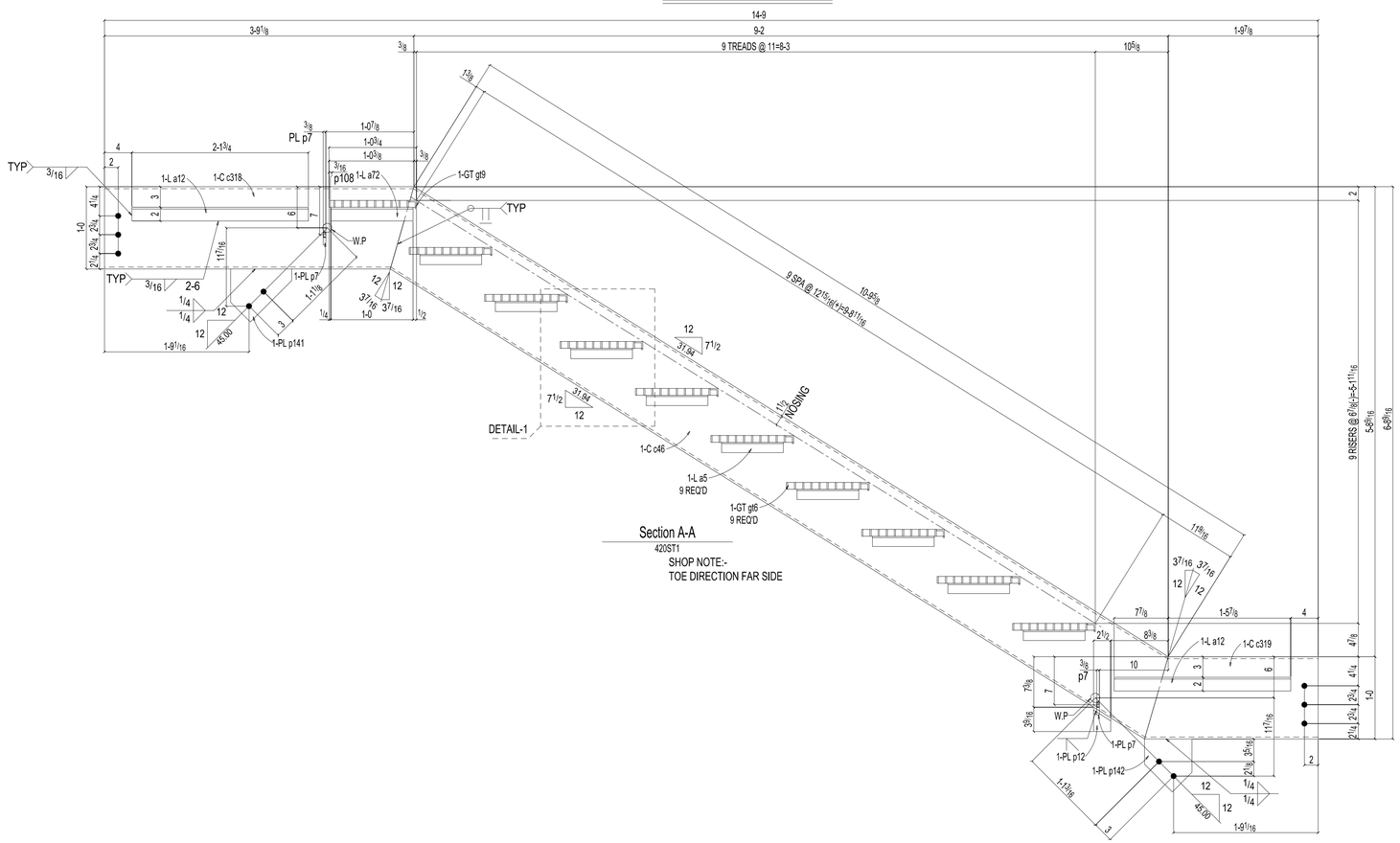

Section A-A
420ST1
SHOP NOTE:-
TOE DIRECTION FAR SIDE

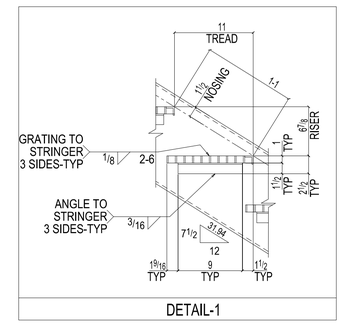

DETAIL-1

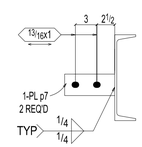

Section C-C
420ST1

BILL OF MATERIAL

LINE	QTY SHIP	QTY FAB	MARK	SHAPE	LENGTH FT.	LENGTH IN.	REMARKS	WEIGHT TOTAL
	4	420ST1		STAIR				3714
	4		c46	C12x20.7	11	1 1/16	A36	918
	4		c318	C12x20.7	3	9 1/8	A36	311
	4		c317	C12x20.7	10	4 9/16	A36	860
	72		a5	L1 1/2x1 1/2x3/16	0	9	A36	97
	8		a12	L2x2x1/4	2	1 3/4	A36	55
	8		a72	L2x2x1/4	1	0	A36	26
	4		c319	C12x20.7	2	1 5/16	A36	175
	4		c316	C12x20.7	1	2 5/8	A36	101
	4		p141	PL3/8x7 3/4	0	8 15/16	A36	29
	4		p142	PL3/8x6 15/16	0	7 3/4	A36	23
	8		p7	PL3/8x3	0	7	A36	18
	4		p12	PL3/8x2 1/2	0	3 9/16	A36	4
	4		p98	PL1/4x2 15/16	0	8 1/8	A36	7
	4		p107	PL1/4x2 3/4	0	2 15/16	A36	2
	8		p91	PL1/4x2 1/4	0	2 15/16	A36	4
	4		p108	PL3/16x1	2	9 3/4	A36	7
	4		gt9	(GT3/16X1)x12 1/4	2	10 1/8	19W4 A-1011	114
	36		gt6	(GT3/16X1)x12 1/16	2	10 1/8	19W4 A-1011	949
				FIELD BOLTS				
	24			TC 3/4 Dia A325N	0	1 3/4	+1HD WASH	15

Total weight : 3714

FOR APPROVAL

PAINT:ONE SHOP COAT OF RUST-INHIBITING PRIMER U.N.
SURFACE PREP: SSPC-SP2

ALL ELECTRODES TO BE E70XX U.N.
ALL WELDS TO BE 3/16 FILLET x CONT. U.N.O.
ALL HOLES TO BE 13/16" U.N.
ALL PIPE TO BE ASTM-A53 U.N.
ALL TUBE TO BE ASTM-A500 U.N.
ALL SHAPES, PLATES, & BARS TO BE ASTM-A36 UNLESS NOTED
VERTICAL EDGE DISTANCE ON SHEAR TABS= 1 1/2" U.N.
VERTICAL EDGE DISTANCE ON CLIP ANGLES= 1 1/4" U.N.
ALL REENTRANT CUTS TO BE 1/2" RADIUS U.N.

REFER WORK THIS SHEET WITH 420.A

APPROVER PLEASE NOTE
ANY VERIFY NOTES NOT
RESPONDED TO ON RETURNED
PRINTS WILL BE TAKEN
AS APPROVED.

825 WREN ROAD, GOODLETTSVILE, TN 37072 (615) 859-5600

ISSUE RECORD				
REV.	DATE	FOR	PROJECT	PROJECT SE TENANT BUILDOUT
A	01-17-25	Approval	LOCATION	400 MADDOX ROAD MT. JULIET, TN
			DETAIL	STAIR DETAIL
			CONTRACTOR	
			ARCHITECT/ENGINEER	
			DWG: JAL DATE: 01-16-25	CHK'D: JAL DATE: 01-16-25
			PROJECT NO.	SHEET NO. 420

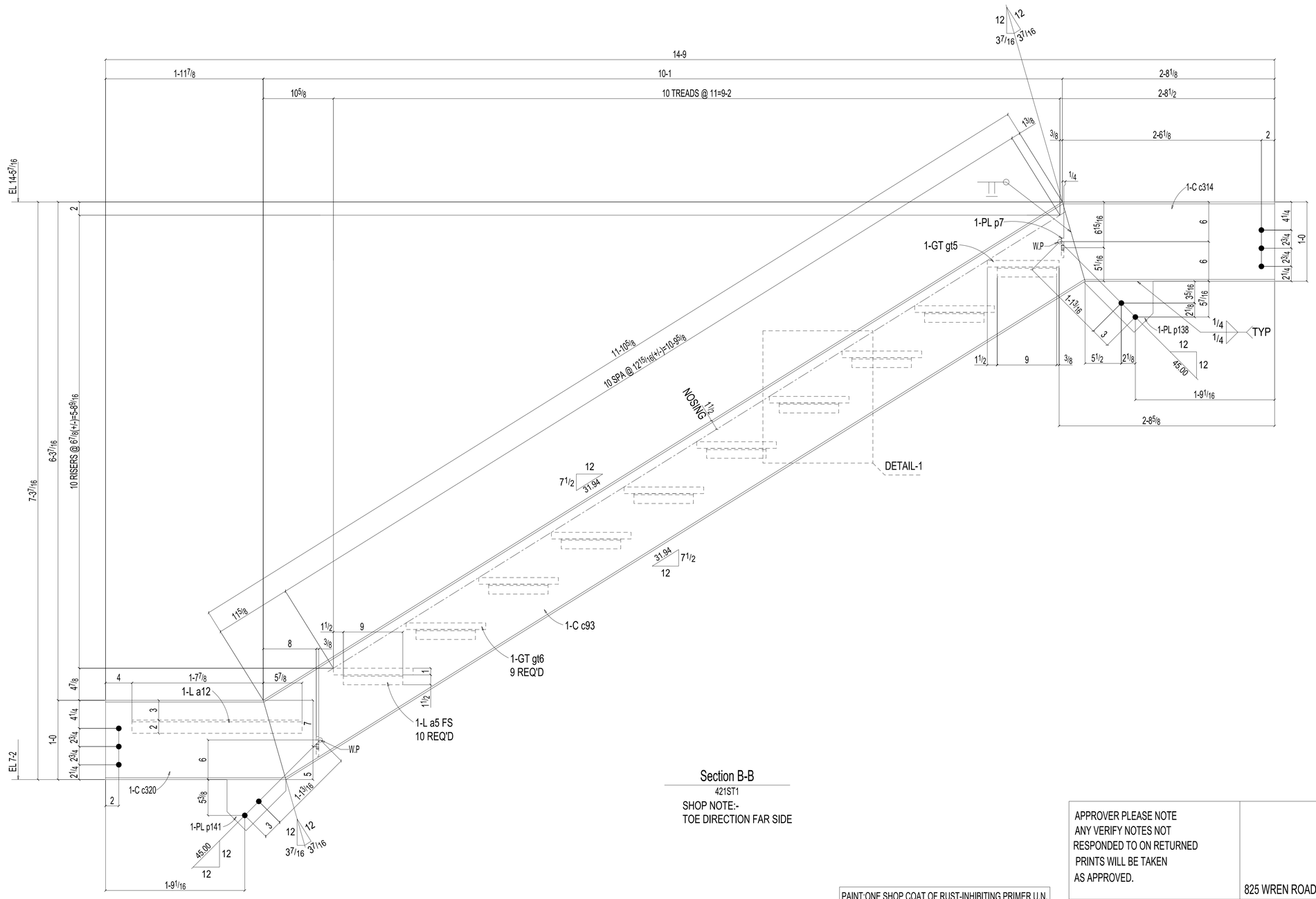

Section B-B

421ST1

SHOP NOTE:-
TOE DIRECTION FAR SIDE

FOR APPROVAL

APPROVER PLEASE NOTE ANY VERIFY NOTES NOT RESPONDED TO ON RETURNED PRINTS WILL BE TAKEN AS APPROVED.

825 WREN ROAD, GOODLETTSVILE, TN 37072 (615) 859-5600

PAINT:ONE SHOP COAT OF RUST-INHIBITING PRIMER U.N.
SURFACE PREP: SSPC-SP2

ALL ELECTRODES TO BE E70XX U.N.
ALL WELDS TO BE 3/16 FILLET x CONT. U.N.O.
ALL HOLES TO BE 13/16" U.N.
ALL PIPE TO BE ASTM-A53 U.N.
ALL TUBE TO BE ASTM-A500 U.N.
ALL SHAPES, PLATES, & BARS TO BE ASTM-A36 UNLESS NOTED
VERTICAL EDGE DISTANCE ON SHEAR TABS= 1 1/2" U.N.
VERTICAL EDGE DISTANCE ON CLIP ANGLES= 1 1/4" U.N.
ALL REENTRANT CUTS TO BE 1/2" RADIUS U.N.

REFER BOM THIS SHEET WITH 421

REFER WORK THIS SHEET WITH 421

ISSUE RECORD				
REV.	DATE	FOR	PROJECT	PROJECT SE TENANT BUILDOUT
A	01-17-25	Approval	LOCATION	400 MADDOX ROAD MT. JULIET, TN
			DETAIL	STAIR DETAIL
			CONTRACTOR	
			ARCHITECT/ENGINEER	
			DWG: JAL DATE: 01-16-25	CHK'D: JAL DATE: 01-16-25
			PROJECT NO.	SHEET NO. 421.A

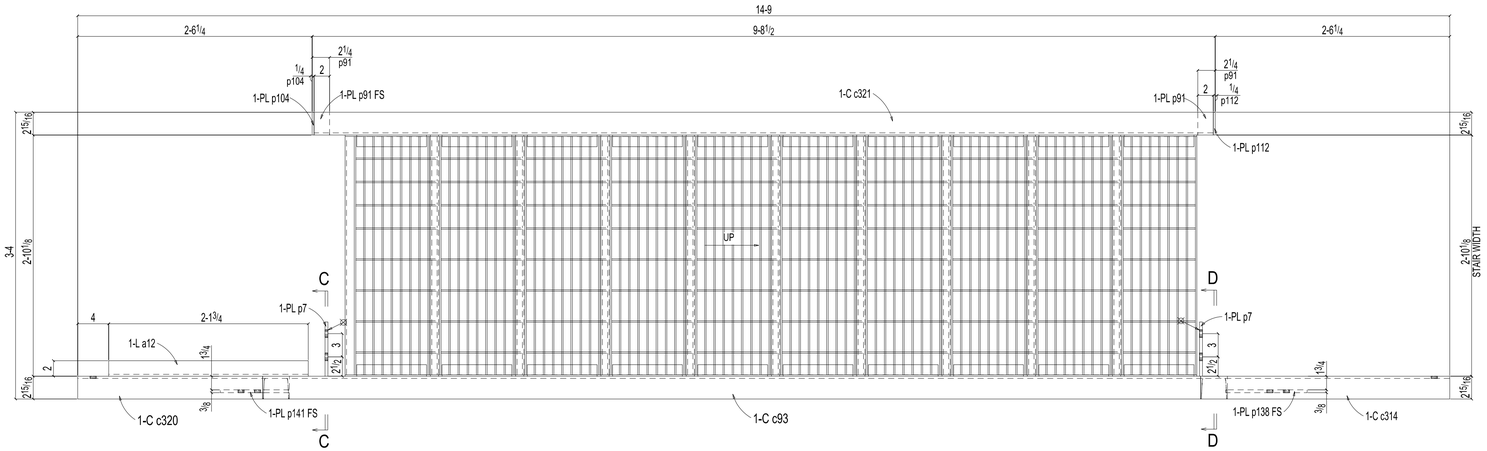

3 STAIRS 421ST1

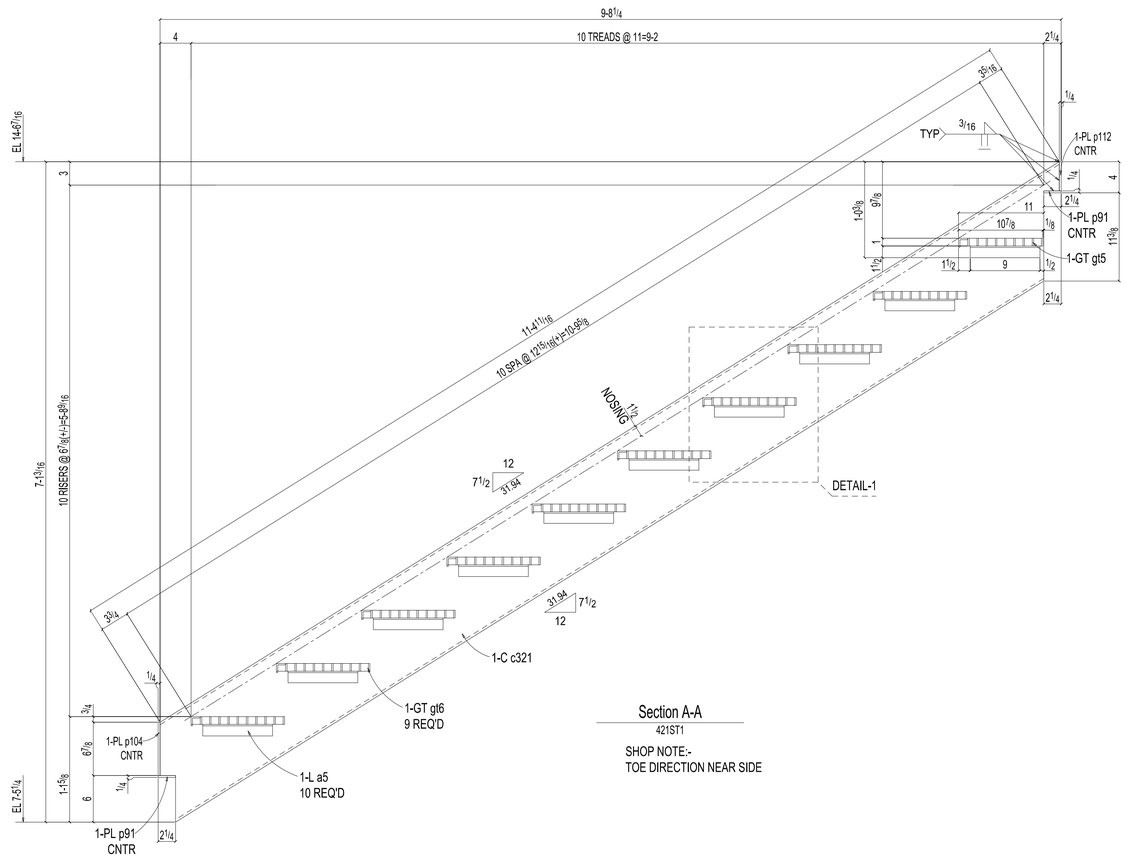

Section A-A
421ST1

SHOP NOTE:-
TOE DIRECTION NEAR SIDE

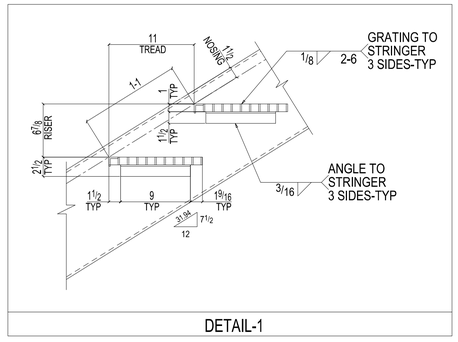

DETAIL-1

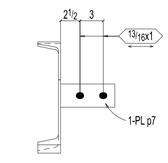

Section D-D
421ST1

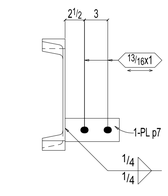

Section C-C
421ST1

BILL OF MATERIAL

LINE	QTY SHIP	QTY FAB	MARK	SHAPE	LENGTH FT.	LENGTH IN.	REMARKS	WEIGHT TOTAL
	3	421ST1		STAIR				2764
	3		c93	C12x20.7	12	2	A36	756
	3		c321	C12x20.7	11	9 13/16	A36	734
	3		c320	C12x20.7	2	3 5/16	A36	141
	3		c314	C12x20.7	2	8 1/8	A36	166
	60		a5	L1 1/2x1 1/2x3/16	0	9	A36	81
	3		a12	L2x2x1/4	2	1 3/4	A36	21
	3		p141	PL3/8x7 3/4	0	8 13/16	A36	22
	3		p138	PL3/8x7 3/4	0	10 1/2	A36	26
	6		p7	PL3/8x3	0	7	A36	13
	3		p104	PL1/4x2 15/16	0	6 7/8	A36	4
	3		p112	PL1/4x2 13/16	0	3 3/4	A36	2
	6		p91	PL1/4x2 1/4	0	2 15/16	A36	3
	27		gt6	(GT3/16X1)x12 1/16	2	10 1/8	19W4 A-1011	712
	3		gt5	(GT3/16X1)x10 7/8	2	10 1/8	19W4 A-1011	72
				FIELD BOLTS				
	18			TC 3/4 Dia A325N	0	1 3/4	+1HD WASH	11

Total weight : 2764

FOR APPROVAL

PAINT:ONE SHOP COAT OF RUST-INHIBITING PRIMER U.N.
SURFACE PREP: SSPC-SP2

ALL ELECTRODES TO BE E70XX U.N.
ALL WELDS TO BE 3/16 FILLET x CONT. U.N.O.
ALL HOLES TO BE 13/16" U.N.
ALL PIPE TO BE ASTM-A53 U.N.
ALL TUBE TO BE ASTM-A500 U.N.
ALL SHAPES, PLATES, & BARS TO BE ASTM-A36 UNLESS NOTED
VERTICAL EDGE DISTANCE ON SHEAR TABS= 1 1/2" U.N.
VERTICAL EDGE DISTANCE ON CLIP ANGLES= 1 1/4" U.N.
ALL REENTRANT CUTS TO BE 1/2" RADIUS U.N.

REFER WORK THIS SHEET WITH 421.A

APPROVER PLEASE NOTE
ANY VERIFY NOTES NOT
RESPONDED TO ON RETURNED
PRINTS WILL BE TAKEN
AS APPROVED.

825 WREN ROAD, GOODLETTSVILE, TN 37072 (615) 859-5600

ISSUE RECORD				
REV.	DATE	FOR	PROJECT	PROJECT SE TENANT BUILDOUT
A	01-17-25	Approval	LOCATION	400 MADDOX ROAD MT. JULIET, TN
			DETAIL	STAIR DETAIL
			CONTRACTOR	
			ARCHITECT/ENGINEER	
			DWG: JAL DATE: 01-16-25	CHK'D: JAL DATE: 01-16-25
			PROJECT NO.	SHEET NO. 421

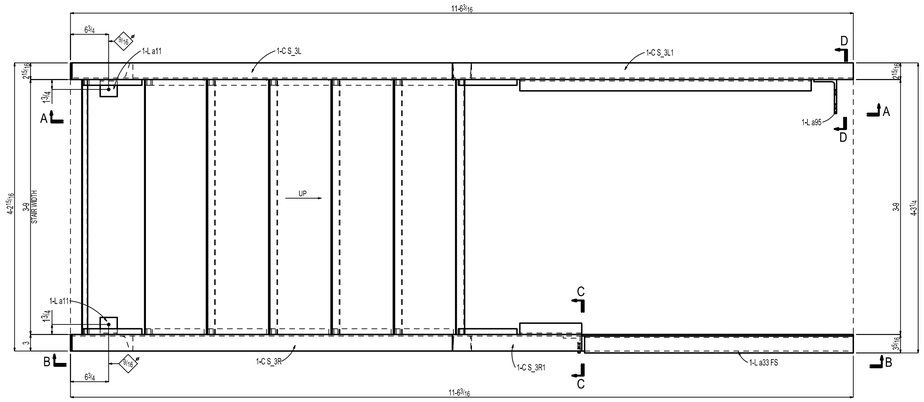

ONE STAIR 1000ST1

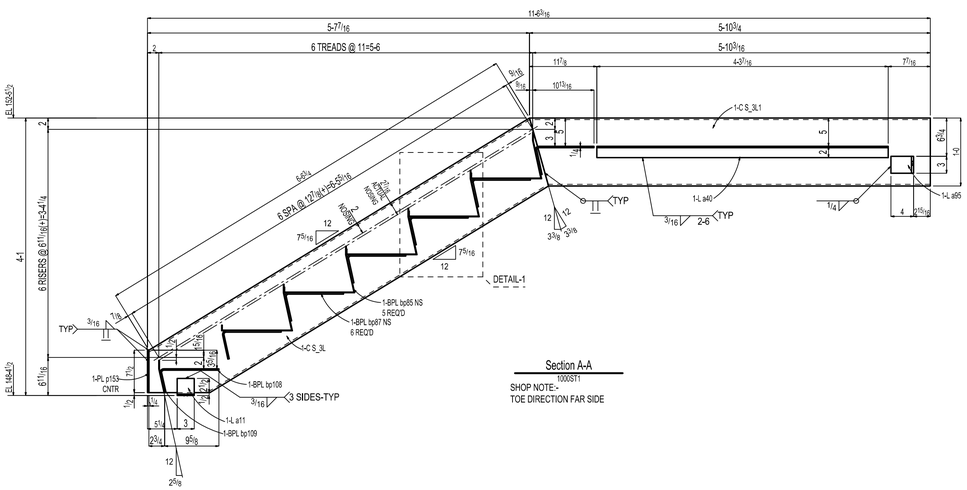

Section A-A
1000ST1
SHOP NOTE -
TOE DIRECTION FAR SIDE

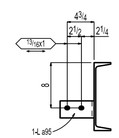

Section D-D
1000ST1

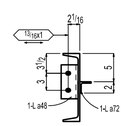

Section C-C
1000ST1

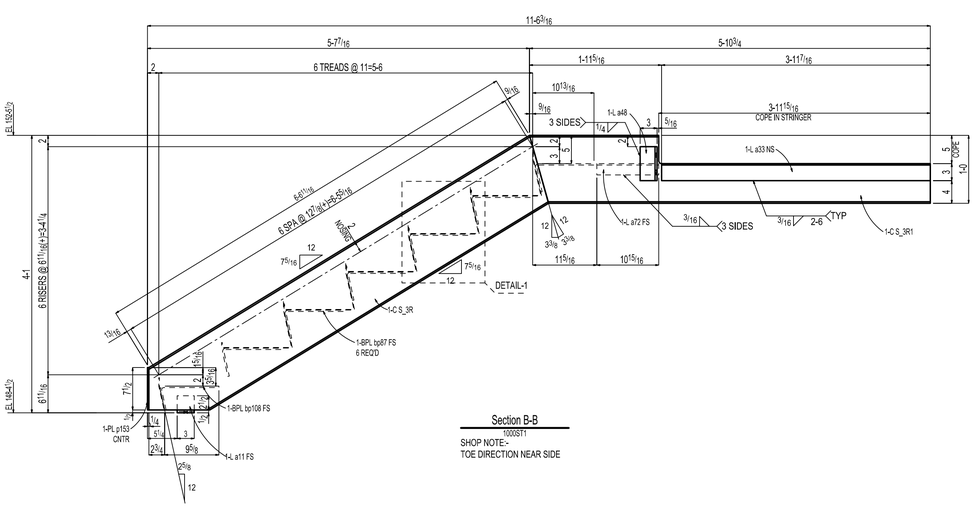

Section B-B
1000ST1
SHOP NOTE -
TOE DIRECTION NEAR SIDE

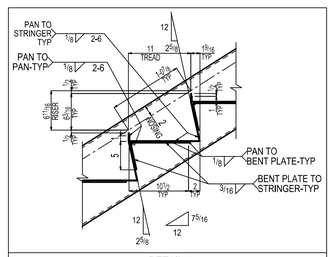

DETAIL-1

BILL OF MATERIAL

QTY TOTAL	PC MARK	DESCRIPTION	LENGTH		REMARKS	WEIGHT TOTAL	ADVANCE MILL #
ONE	1000ST1	STAIR				744	
1	S_3L1	C12x20.7	5	10 3/4	A36	122	
1	S_3R1	C12x20.7	5	10 3/4	A36	122	
1	S_3L	C12x20.7	6	10 9/16	A36	142	
1	S_3R	C12x20.7	6	10 9/16	A36	142	
1	a95	L6x4x3/8	0	3	A36	3	
1	a48	L3x3x3/8	0	6	A36	4	
1	a33	L3x3x1/4	3	11 7/16	A36	19	
2	a11	L3x3x1/4	0	3	A36	2	
1	a40	L2x2x1/4	4	3 7/16	A36	14	
1	a72	L2x2x1/4	0	10 15/16	A36	3	
2	p153	PL 1/4x2 15/16	0	7 1/2	A36	3	
12	bp87	BPL 1/4x15 3/8	0	1	BENT A36	13	
2	bp108	BPL 1/4x14 9/16	0	1	BENT A36	2	
5	bp85	BPL12GAx21 5/8	3	9	BENT A36	144	
1	bp109	BPL12GAx5 13/16	3	9	BENT A36	8	
		FIELD BOLTS					
2		1/2 Dia KH-EZ SCREW ANCHOR	0	4			

Total weight : 744

NO	REVISION	BY	DATE
0	FOR FABRICATION	SDL-JAL	12 / 10 / 2024

SCG PROJECT: --- PFG PROJECT: --- STEEL FAB:

CLIENT / PROJECT: PRINCETON HOBSON COLLEGE

PRINCETON, NJ

ITEM # 2 | DWG TITLE: - STAIR DETAIL

HOLES: Ø13/16 UNO | PIPES: A53B

ELECTRODES: 70XXX UNO | TUBES: A500B | SCALE: -- | DRAWING: -

BEAMS: A992 | FINISH: PRIME PAINTED | DWN. BY: | DATE: - 12-10-2024

ANGLE, CHANNELS, PLATES & BARS: A36 | CHK'D. BY: | DATE: - 12-10-2024

1000

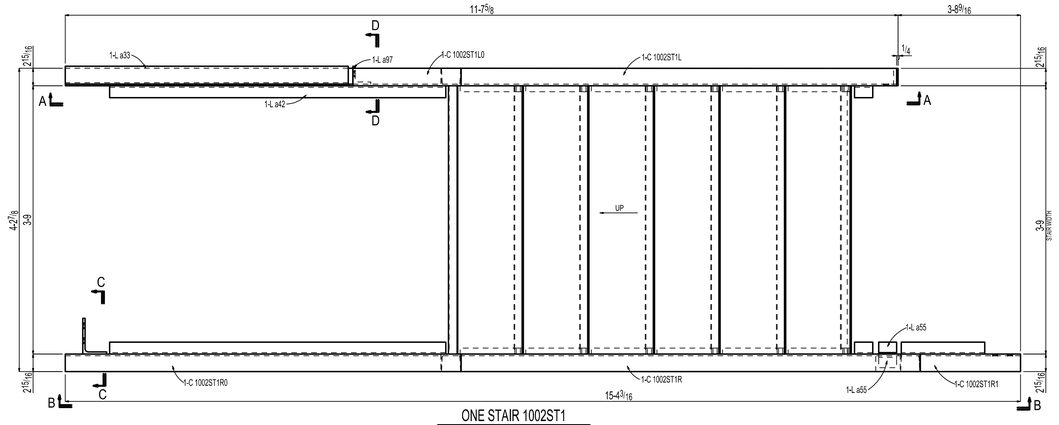

ONE STAIR 1002ST1

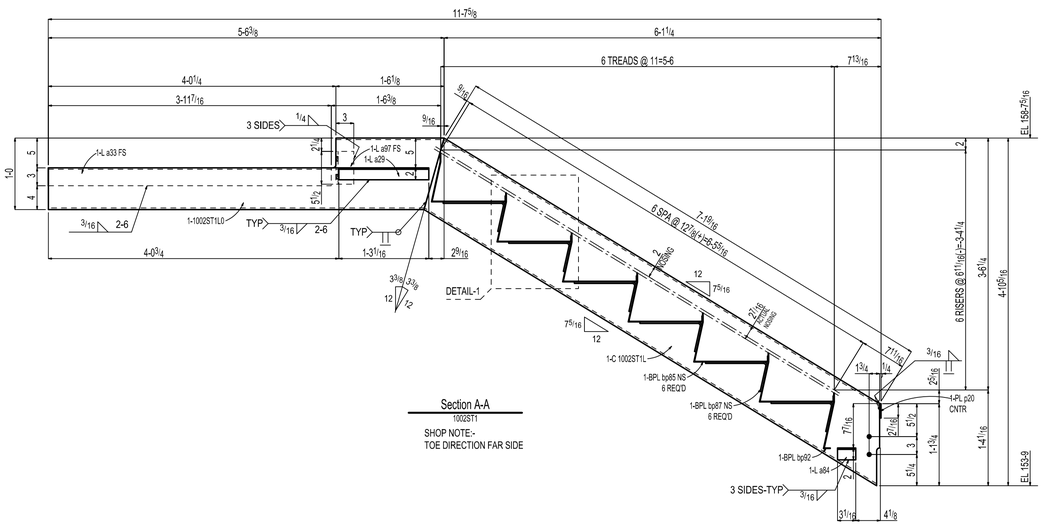

Section A-A
1002ST1
SHOP NOTE:-
TOE DIRECTION FAR SIDE

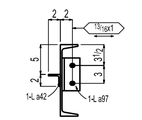

Section D-D
1002ST1

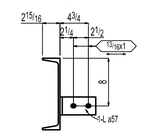

Section C-C
1002ST1

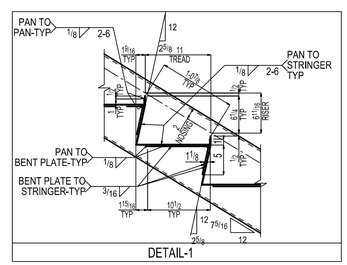

DETAIL-1

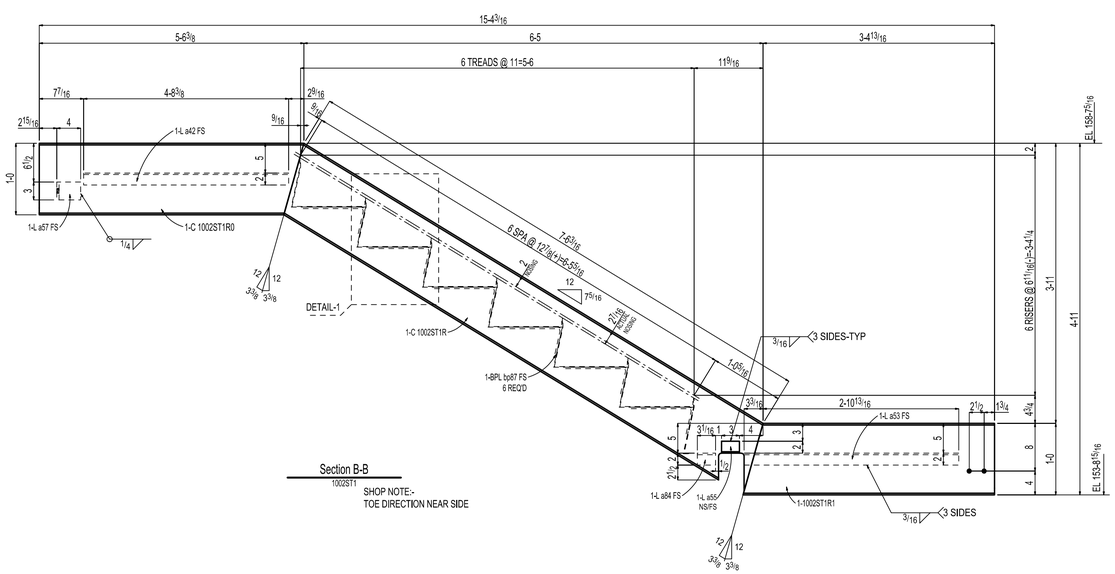

Section B-B
1002ST1
SHOP NOTE:-
TOE DIRECTION NEAR SIDE

BILL OF MATERIAL

QTY TOTAL	PC MARK	DESCRIPTION	LENGTH		REMARKS	WEIGHT TOTAL	ADVANCE MILL #
ONE	1002ST1	STAIR				884	
1	1002ST1R1	C12x20.7	3	8 9/16	A36	76	
1	1002ST1L0	C12x20.7	5	6 3/8	A36	115	
1	1002ST1R0	C12x20.7	5	6 3/8	A36	115	
1	1002ST1L	C12x20.7	7	8 9/16	A36	159	
1	1002ST1R	C12x20.7	7	9 3/8	A36	161	
1	a57	L6x4x3/8	0	3	A36	3	
1	a97	L3x3x3/8	0	5 1/2	A36	3	
1	a33	L3x3x1/4	3	11 7/16	A36	19	
1	a42	L2x2x1/4	4	8 3/8	A36	15	
1	a53	L2x2x1/4	3	2	A36	10	
1	a29	L2x2x1/4	1	3 1/16	A36	4	
2	a84	L2x2x1/4	0	3 1/16	A36	2	
2	a55	L2x2x1/4	0	3	A36	2	
1	p20	PL 1/4x2 7/16	0	2 15/16	A36	1	
12	bp87	BPL 1/4x15 3/8	0	1	BENT A36	13	
6	bp85	BPL12GAx21 5/8	3	9	BENT A36	173	
1	bp92	BPL12GAx10 1/2	3	9	BENT A36	14	
		FIELD BOLTS					
4		3/4 Dia A325N	0	1 3/4	+1HD WASH		

Total weight : 884

NO	REVISION	BY	DATE
0	FOR FABRICATION	SDL-JAL	12 / 10 / 2024

SCG PROJECT: --- PFG PROJECT: --- STEEL FAB:

CLIENT / PROJECT: PRINCETON HOBSON COLLEGE

PRINCETON, NJ

ITEM # 2 | DWG TITLE: - STAIR DETAIL

HOLES: Ø13/16 UNO | PIPES: A53B

ELECTRODES: 70XXX UNO | TUBES: A500B | SCALE: -- | DRAWING: -

BEAMS: A992 | FINISH: PRIME PAINTED | DWN. BY: | DATE: - 12-10-2024

ANGLE, CHANNELS, PLATES & BARS: A36 | CHK'D. BY: | DATE: - 12-10-2024

1002

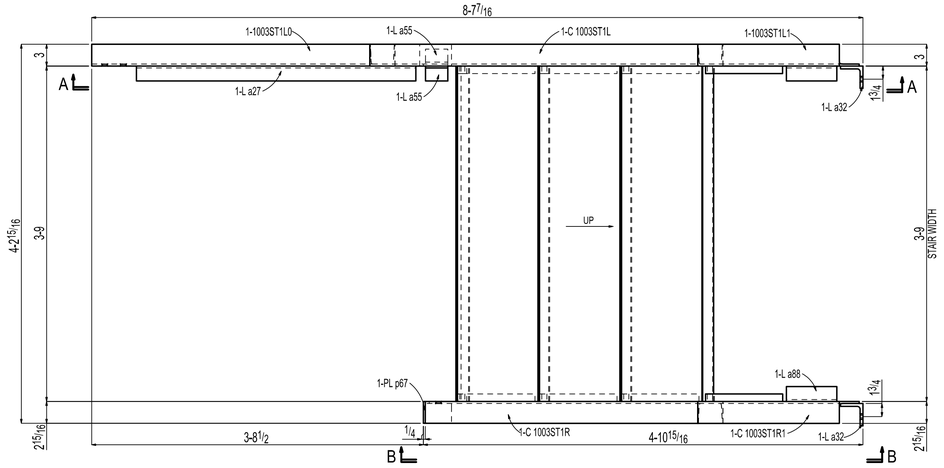

ONE STAIR 1003ST1

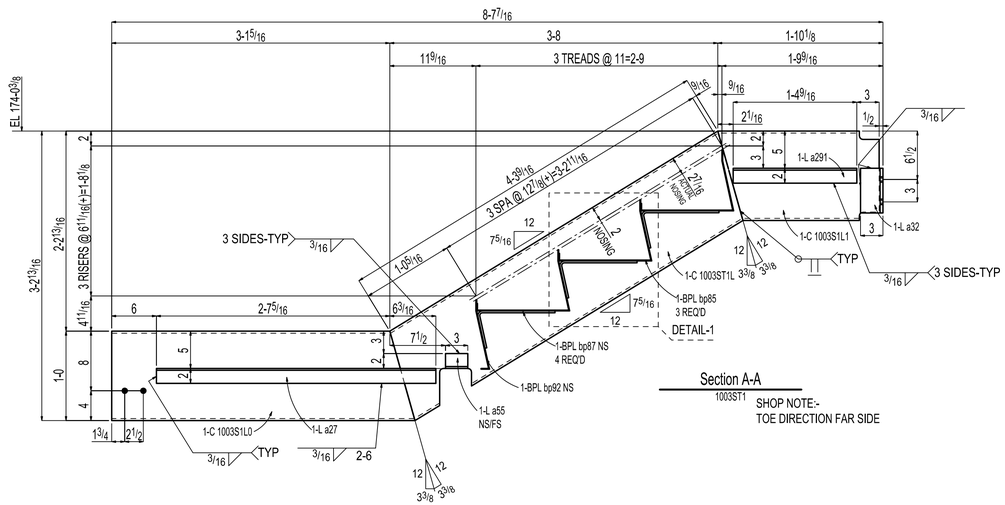

Section A-A
1003ST1

SHOP NOTE:-
TOE DIRECTION FAR SIDE

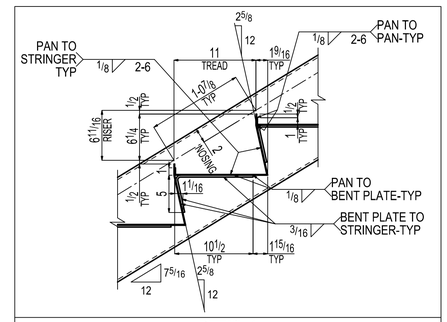

DETAIL-1

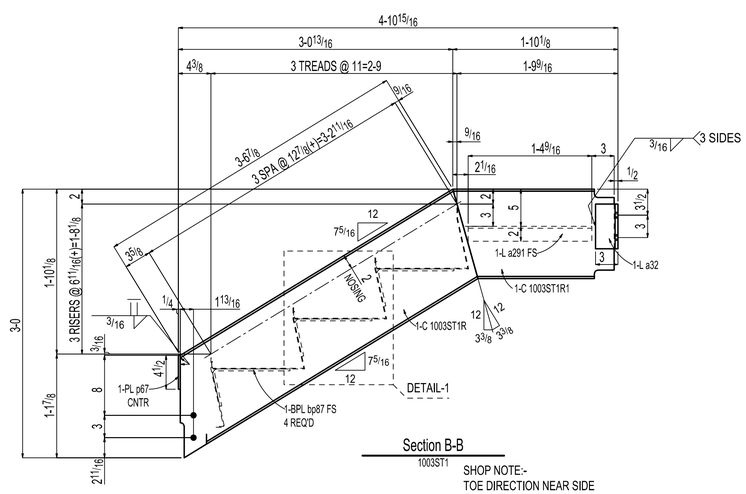

Section B-B
1003ST1

SHOP NOTE:-
TOE DIRECTION NEAR SIDE

BILL OF MATERIAL

QTY TOTAL	PC MARK	DESCRIPTION	LENGTH		REMARKS	WEIGHT TOTAL	ADVANCE MILL #
ONE	1003ST1	STAIR				476	
1	1003ST1L1	C12x20.7	1	9 5/8	A36	37	
1	1003ST1R1	C12x20.7	1	9 5/8	A36	37	
1	1003ST1L0	C12x20.7	3	4 11/16	A36	70	
1	1003ST1L	C12x20.7	4	6 15/16	A36	95	
1	1003ST1R	C12x20.7	4	1 9/16	A36	85	
2	a32	L3x3x3/8	0	6	A36	7	
1	a27	L2x2x1/4	3	1 1/2	A36	10	
2	a291	L2x2x1/4	1	4 9/16	A36	9	
2	a55	L2x2x1/4	0	3	A36	2	
1	p67	PL 1/4x2 15/16	0	4 9/16	A36	1	
6	bp87	BPL 1/4x1 5/8	0	1	BENT A36	7	
3	bp85	BPL12GAx2 5/8	3	9	BENT A36	87	
1	bp92	BPL12GAx10 1/2	3	9	BENT A36	29	
		FIELD BOLTS					
4		3/4 Dia A325N	0	2	+2HD WASH		
2		3/4 Dia A325N	0	1 3/4	+1HD WASH		

Total weight : 476

NO	REVISION	BY	DATE
0	FOR FABRICATION	SDL-JAL	12 / 10 / 2024

SCG PROJECT: --- PFG PROJECT: --- STEEL FAB:

CLIENT / PROJECT: PRINCETON HOBSON COLLEGE

PRINCETON, NJ

ITEM # 2 | DWG TITLE: - STAIR DETAIL

HOLES: Ø 13/16 UNO | PIPES: A53B

ELECTRODES: 70XXX UNO | TUBES: A500B | SCALE: -- | DRAWING: -

BEAMS: A992 | FINISH: PRIME PAINTED | DWN. BY: | DATE: - 12-10-2024

ANGLE, CHANNELS, PLATES & BARS: A36 | CHK'D. BY: | DATE: - 12-10-2024

1003

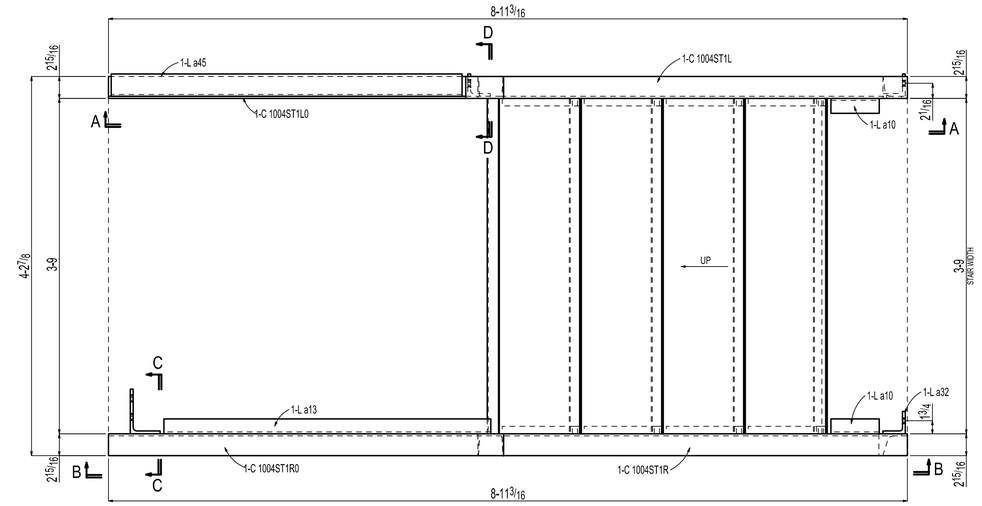

ONE STAIR 1004ST1

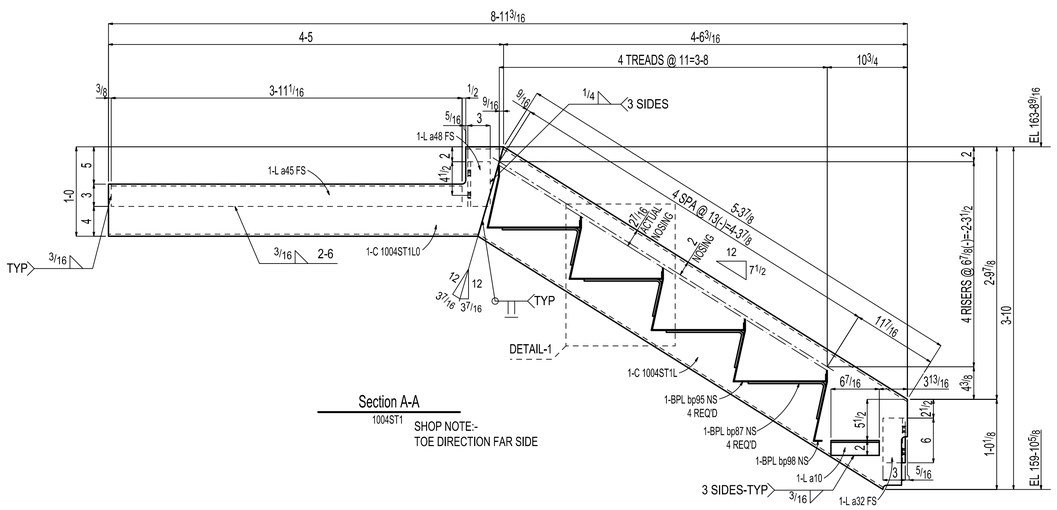

Section A-A
1004ST1
SHOP NOTE:-
TOE DIRECTION FAR SIDE

Section B-B
1004ST1
SHOP NOTE:-
TOE DIRECTION NEAR SIDE

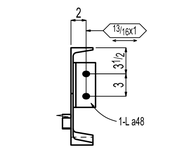

Section D-D
1004ST1

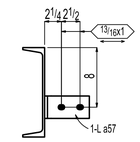

Section C-C
1004ST1

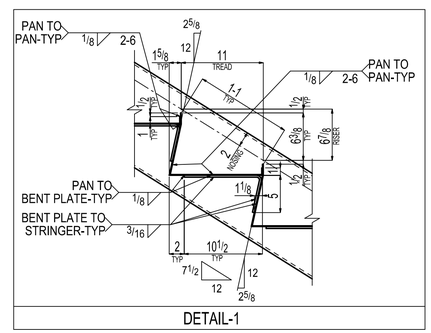

DETAIL-1

BILL OF MATERIAL

QTY TOTAL	PC MARK	DESCRIPTION	LENGTH		REMARKS	WEIGHT TOTAL	ADVANCE MILL #
ONE	1004ST1	STAIR				610	
1	1004ST1L0	C12x20.7	4	5	A36	91	
1	1004ST1R0	C12x20.7	4	5	A36	91	
1	1004ST1L	C12x20.7	5	9 5/16	A36	120	
1	1004ST1R	C12x20.7	5	9 1/2	A36	120	
1	a57	L6x4x3/8	0	3	A36	3	
2	a32	L3x3x3/8	0	6	A36	7	
1	a48	L3x3x3/8	0	6	A36	4	
1	a45	L3x3x1/4	3	11 1/16	A36	19	
1	a13	L2x2x1/4	3	7 7/8	A36	12	
2	a10	L2x2x1/4	0	6 7/16	A36	3	
8	bp87	BPL 1/4x15 3/8	0	1	BENT A36	9	
4	bp95	BPL12GAx21 13/16	3	9	BENT A36	116	
1	bp98	BPL12GAx10 11/16	3	9	BENT A36	14	
		FIELD BOLTS					
4		3/4 Dia A325N	0	2	+2HD WASH		

Total weight : 610

NO	REVISION	BY	DATE
0	FOR FABRICATION	SDL-JAL	12 / 10 / 2024

SCG PROJECT: --- PFG PROJECT: --- STEEL FAB:

CLIENT / PROJECT: PRINCETON HOBSON COLLEGE

PRINCETON, NJ

ITEM # 2		DWG TITLE: - STAIR DETAIL	
HOLES: Ø13/16 UNO	PIPES: A53B		
ELECTRODES: 70XXX UNO	TUBES: A500B	SCALE: --	DRAWING: -
BEAMS: A992	FINISH: PRIME PAINTED	DWN. BY:	DATE: - 12-10-2024
ANGLE, CHANNELS, PLATES & BARS: A36		CHK'D. BY:	DATE: - 12-10-2024

1004

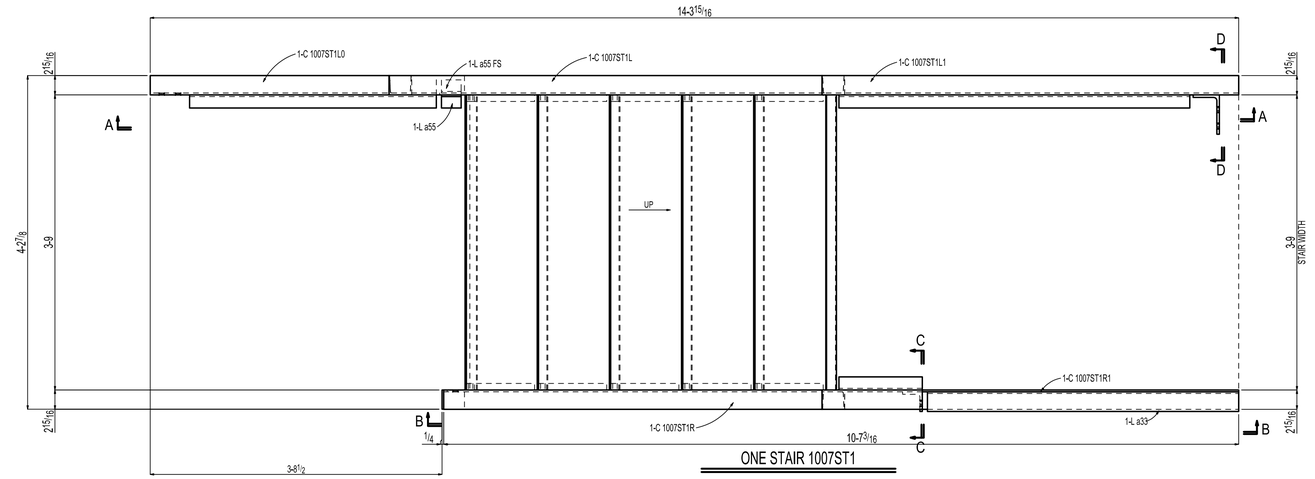

ONE STAIR 1007ST1

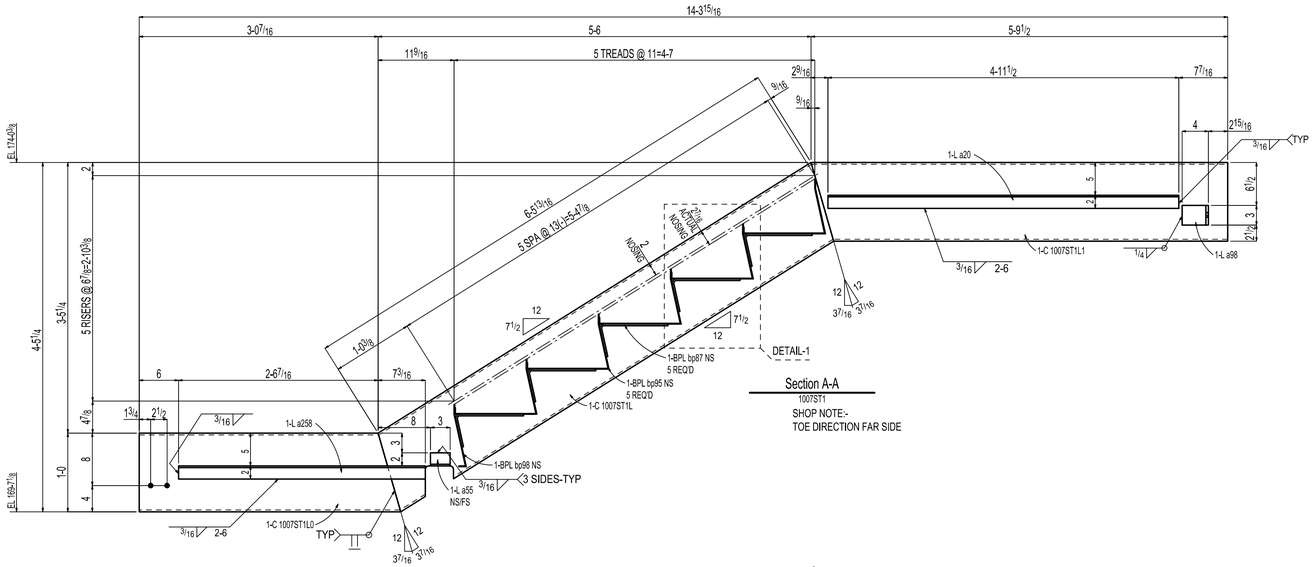

Section A-A
1007ST1
SHOP NOTE:-
TOE DIRECTION FAR SIDE

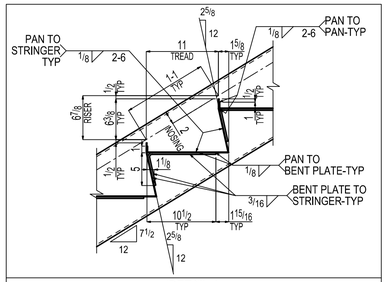

DETAIL-1

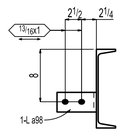

Section D-D
1007ST1

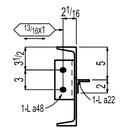

Section C-C
1007ST1

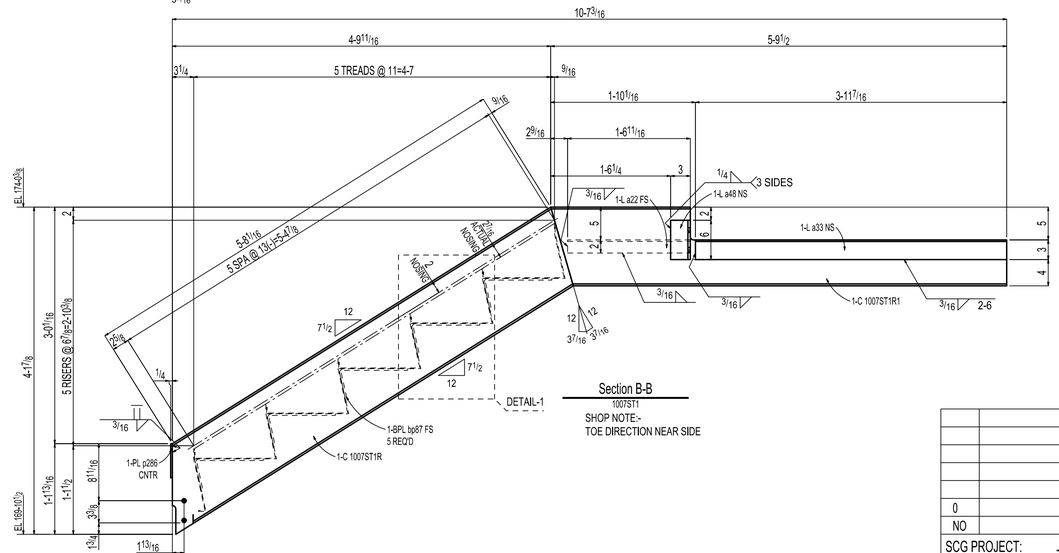

Section B-B
1007ST1
SHOP NOTE:-
TOE DIRECTION NEAR SIDE

BILL OF MATERIAL

QTY TOTAL	PC MARK	DESCRIPTION	LENGTH		REMARKS	WEIGHT TOTAL	ADVANCE MILL #
ONE	1007ST1	STAIR				808	
1	1007ST1L1	C12x20.7	5	9 1/2	A36	120	
1	1007ST1R1	C12x20.7	5	9 1/2	A36	120	
1	1007ST1L0	C12x20.7	3	3 7/8	A36	69	
1	1007ST1L	C12x20.7	6	9 9/16	A36	140	
1	1007ST1R	C12x20.7	6	2 7/8	A36	129	
1	a98	L6x4x3/8	0	3	A36	3	
1	a48	L3x3x3/8	0	6	A36	4	
1	a33	L3x3x1/4	3	11 7/16	A36	19	
1	a20	L2x2x1/4	4	11 1/2	A36	16	
1	a258	L2x2x1/4	3	1 5/8	A36	10	
1	a22	L2x2x1/4	1	6 11/16	A36	5	
2	a55	L2x2x1/4	0	3	A36	2	
1	p286	PL1/4x2 15/16	0	5 3/16	A36	1	
10	bp87	BPL1/4x15 3/8	0	1	BENT A36	11	
5	bp95	BPL12GAx21 13/16	3	9	BENT A36	146	
1	bp98	BPL12GAx10 11/16	3	9	BENT A36	14	
		FIELD BOLTS					
4		3/4 Dia A325N	0	1 3/4	+1HD WASH		

Total weight : 808

NO	REVISION	BY	DATE
0	FOR FABRICATION	SDL-JAL	12 / 10 / 2024

SCG PROJECT: --- PFG PROJECT: --- STEEL FAB:

CLIENT / PROJECT: PRINCETON HOBSON COLLEGE

PRINCETON, NJ

ITEM # 2		DWG TITLE: - STAIR DETAIL	
HOLES: Ø13/16 UNO	PIPES: A53B		
ELECTRODES: 70XXX UNO	TUBES: A500B	SCALE: --	DRAWING: -
BEAMS: A992	FINISH: PRIME PAINTED	DWN. BY:	DATE: - 12-10-2024
ANGLE, CHANNELS, PLATES & BARS: A36		CHK'D. BY:	DATE: - 12-10-2024

1007