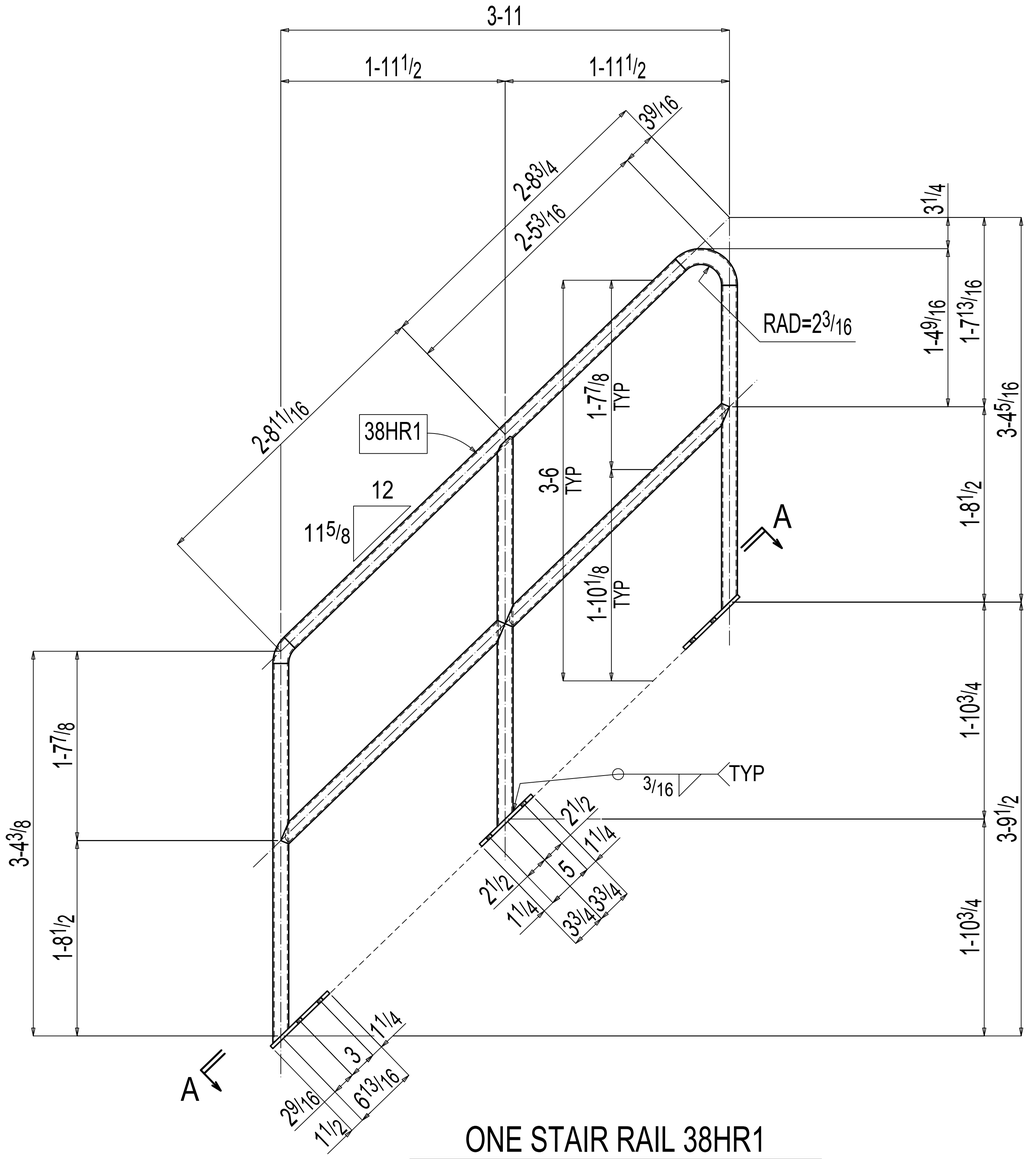

ONE STAIR RAIL 38HR1

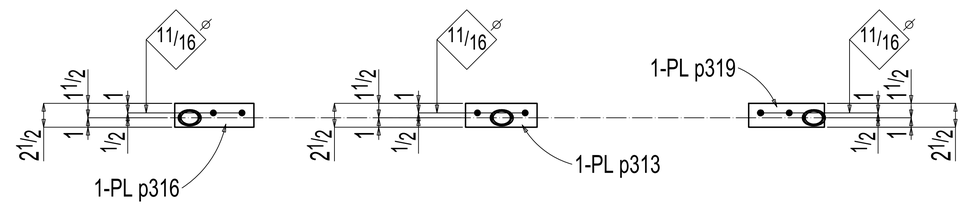

Section A-A
38HR1

BILL OF MATERIAL

MARK	QTY	DESCRIPTION	FT	IN	REMARKS
38HR1	ONE	STAIR RAIL			
	1	PIPE 1 1/4 STD	10	2 7/16	LIN FT A53B
	1	PIPE 1 1/4 STD	9	6 3/4	LIN FT A53B
	1	PIPE 1 1/4 STD	1	0 1/16	LIN FT A53B
p319	1	PL3/8x2 1/2	0	7 15/16	A36
p316	1	PL3/8x2 1/2	0	6 5/16	A36
p313	1	PL3/8x2 1/2	0	7 1/2	A36
		FIELD BOLTS			
	2	5/8 Dia A325N	0	2 1/4	+1BVL,1HD WASH
	4	5/8 Dia A307	0	2	+1BVL WASH

SHOP NOTE:
SURFACE PREP:SSPC-SP2

HOLES: 13/16 DIA U.N.O. FINISH: STD SHOP PRIMER

REV	DATE	DESCRIPTION	BY
A			

CLIENT:

ARCH & ENGR:

JOB NAME:

LOCATION:

DETAIL OF:

DATE: DRAWN BY:

CHECKED BY: JOB #

DWG. # 38 A

BILL OF MATERIAL

NO.	SECTION	FIT.	IN.	TEMP MARK	SHIPPING MARK	WEIGHT UNIT	WEIGHT TOTAL	REMARKS
ONE	WALL RAIL				38HR1	19	19	
1	PIPE 1 1/4 STD	5	7 1/2	38HR1		13	13	A53B
1	PIPE 1 1/4 STD	1	0 3/8	hss384		2	2	A53B
1	PIPE 1 1/4 STD	0	11 7/8	hss379		2	2	A53B
1	PIPE 1 1/4 STD	0	2 3/4	hss381		1	1	A53B
1	PIPE 1 1/4 STD	0	2 3/4	hss382		1	1	A53B
2	RPL 1/4x11 1/16			p153		0	0	A36
2	WAGNER BRACKET							#3418
3	3/8" Dia LONG SCREW	0	3					

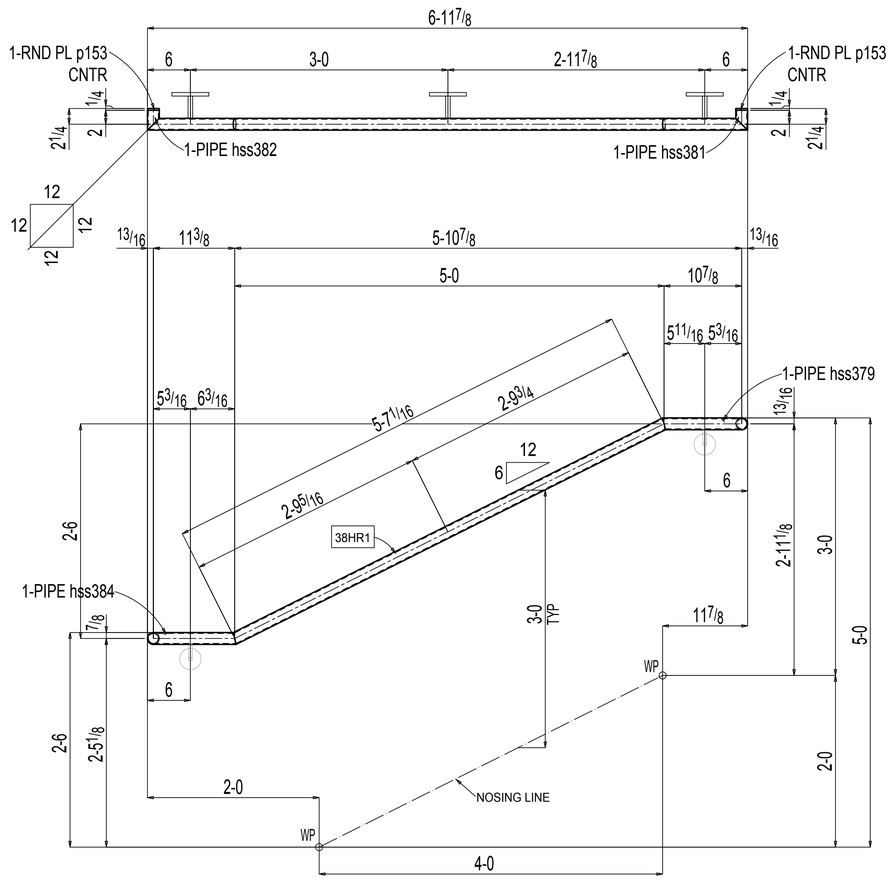

ONE WALL RAIL 38HR1

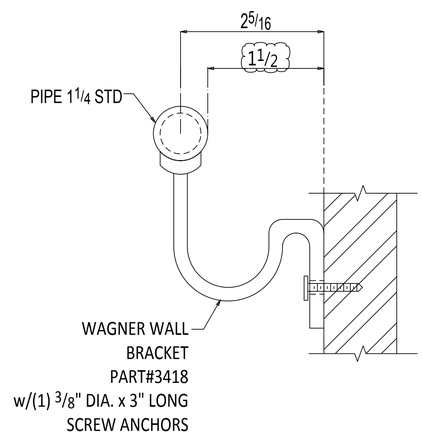

TYPICAL WAGNER BRACKET DETAIL

TOTAL WEIGHT THIS DRAWINGS:19

PAINT: 1-S/C PRIMER

OPEN HOLES: 13/16" DIA (UNO) OPEN SLTS: 13/16x1 DIA (UNO) BOLT: 3/4" DIA A325(UNO) EDGE DIST. 1 1/2"(UNO)

MATERIAL	
WIDE FLANGE	A992 (UNO)
PIPE	A53B (UNO)
TUBE	A500B (UNO)
CHANNEL	A36 (UNO)
PLATE,ANGLE,BAR	A36 (UNO)

THESE SHOP AND ERECTION DRAWINGS ARE AND SHALL REMAIN THE PROPERTY OF MODERN MACHINE SHOP, INC. THESE SHALL NOT BE USED, REPRODUCED, MODIFIED, OR COPIED IN ANY FORM OR MANNER WITHOUT THE EXPRESS, WRITTEN PERMISSION, CONSENT, AND DUE COMPENSATION TO THE FABRICATOR:
MODERN MACHINE SHOP, INC., COPYRIGHT 2013

NOTICE TO CONTRACTORS AND/OR ERECTORS

MODERN MACHINE SHOP, INC. WILL NOT ACCEPT BACKCHARGERS FOR CORRECTIVE WORK OR REPLACED MATERIALS UNLESS AUTHORIZED AND APPROVED. FAILURE TO COMPLY WITH THIS REQUIREMENT WILL BECOME CONTRACTORS/ERECTORS LIABILITY. ANY QUESTIONS CALL (956) 722-4656

DATE: _____ SIGNATURE: _____

REF:E21 THRU E23

ALL RUNNING DIMENSIONS FROM END OF MAIN MATERIAL
ALL VERTICAL SPACING OF HOLES TO BE 3"UNLESS NOTED.
ALL SNIPS TO BE 3/4 x 3/4 UNLESS NOTED.
ALL COPES TO BE RADIUSED.
⊗ DENOTES "CONTACT SURFACE"THIS SIDE OF PLATE.
HOLES IN END PLATES AND OUTSTANDING LEGS OF END CLIPS
X INDICATES LAYOUT MARK FOR FABRICATION
LD=LW,DTI HD=FLT WASHER FL=WROUGHT WASHER
MEMBERS ARE TO BE ERECTED SO THAT MARKED END IS IN SAME LOCATION AS ON ERECTION DRAWING NO.

NO.	DATE	BY	DESCRIPTION

REV.

CUSTOMER: _____
ARCHITECT: _____
PROJECT: _____
LOCATION: _____

DRWN _____ DATE _____ FOR APPL. _____ ORDER NO. _____
CHKD _____ DATE _____ TO SHOP _____ REV. A DWG. 38

BILL OF MATERIAL

MARK	QTY	DESCRIPTION	FT	IN	REMARKS
39HR1	ONE	STAIR RAIL			
	1	PIPE 1 1/4 STD	10	2 7/16	LIN FT A53B
	1	PIPE 1 1/4 STD	9	6 3/4	LIN FT A53B
	1	PIPE 1 1/4 STD	1	0 1/16	LIN FT A53B
p320	1	PL3/8x2 1/2	0	7 15/16	A36
p316	1	PL3/8x2 1/2	0	6 5/16	A36
p313	1	PL3/8x2 1/2	0	7 1/2	A36
		FIELD BOLTS			
	2	5/8 Dia A325N	0	2 1/4	+1BVL,1HD WASH
	4	5/8 Dia A307	0	2	+1BVL WASH

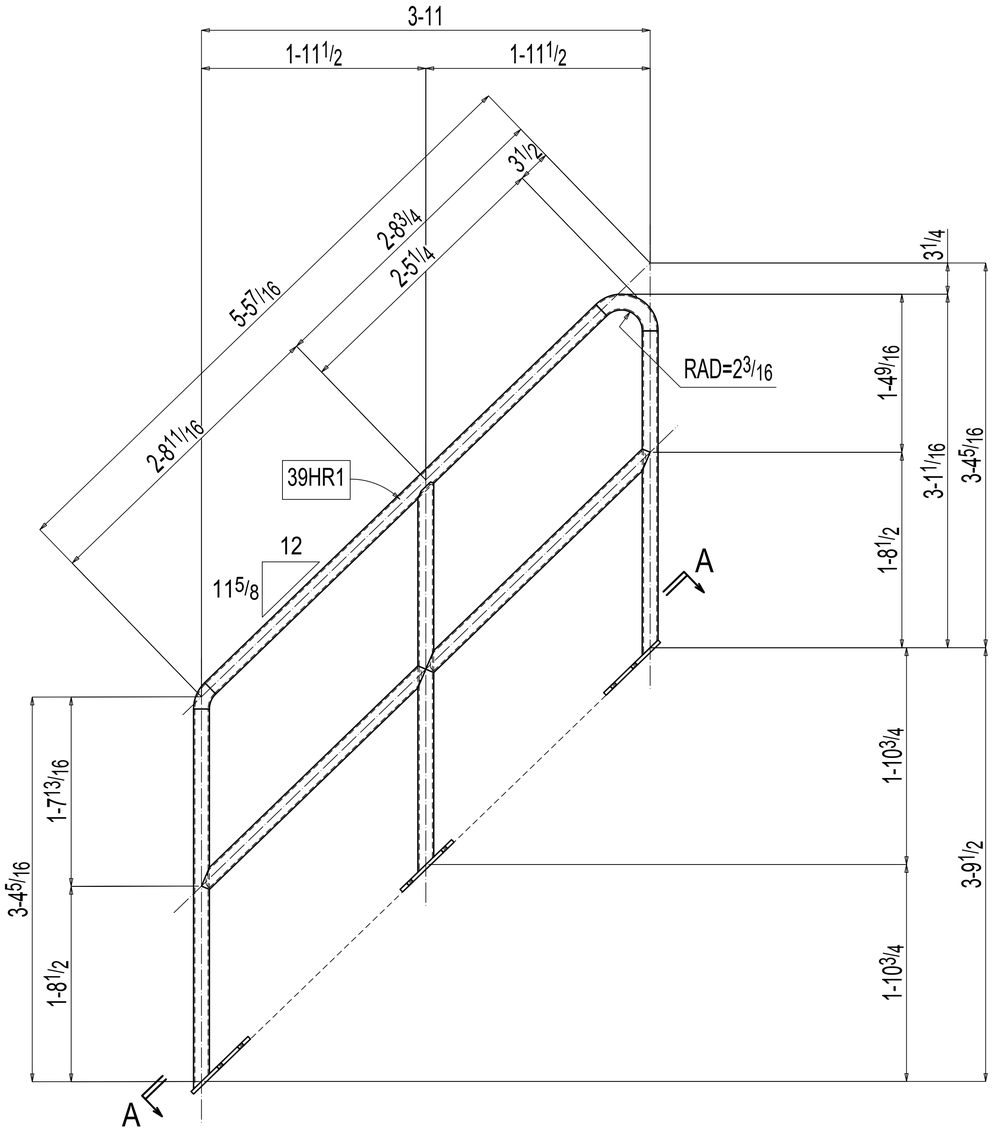

ONE STAIR RAIL 39HR1

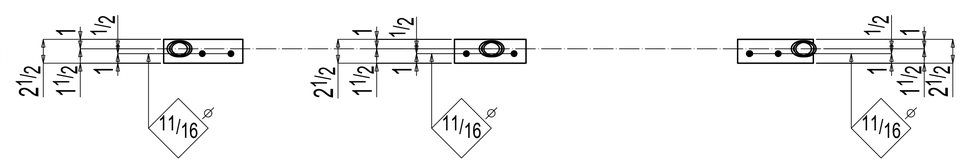

Section A-A
39HR1

SHOP NOTE:
SURFACE PREP:SSPC-SP2

HOLES: 13/16 DIA U.N.O. FINISH: STD SHOP PRIMER

REV	DATE	DESCRIPTION	BY
A			

CLIENT:

ARCH & ENGR:

JOB NAME:

LOCATION:

DETAIL OF:

DATE: DRAWN BY:

CHECKED BY: JOB #

DWG. # 39 A

BILL OF MATERIAL

NO.	SECTION	FIT.	IN.	TEMP MARK	SHIPPING MARK	WEIGHT UNIT	WEIGHT TOTAL	REMARKS
ONE	HANDRAIL				39HR1	37	37	
1	PIPE 1 1/4 STD	5	7 1/2	39HR1		13	13	A53B
1	PIPE 1 1/4 STD	3	4	hss370		8	8	A53B
1	PIPE 1 1/4 STD	3	3 3/16	hss375		7	7	A53B
1	PIPE 1 1/4 STD	1	0 3/8	hss376		2	2	A53B
1	PIPE 1 1/4 STD	1	0	hss353		2	2	A53B
1	PIPE 1 1/4 STD	1	0	hss369		2	2	A53B
1	PIPE 1 1/4 STD	1	0	hss352		2	2	A53B

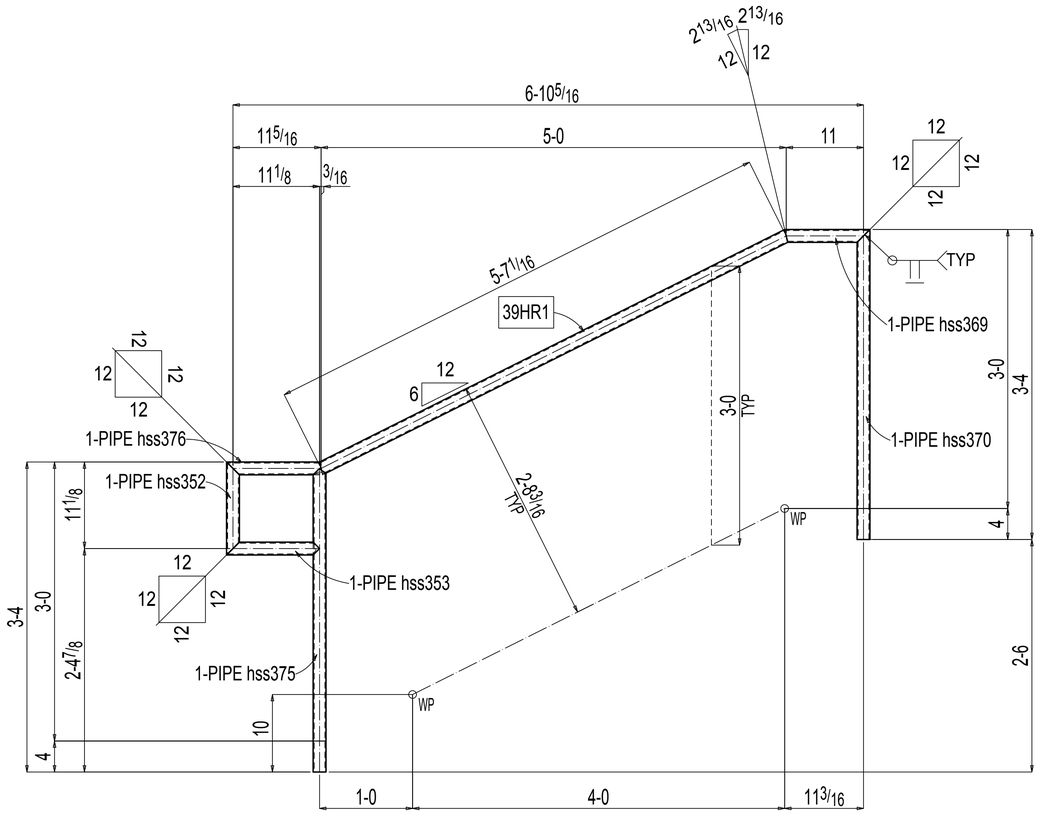

ONE HANDRAIL 39HR1

TOTAL WEIGHT THIS DRAWINGS:111

PAINT: 1-S/C PRIMER
OPEN HOLES: 13/16" DIA (UNO) OPEN SLOTS: 13/16x1 DIA (UNO) BOLT: 3/4" DIA A325(UNO) EDGE DIST. 1 1/2"(UNO)

MATERIAL	
WIDE FLANGE	A992 (UNO)
PIPE	A53B (UNO)
TUBE	A500B (UNO)
CHANNEL	A36 (UNO)
PLATE,ANGLE,BAR	A36 (UNO)

THESE SHOP AND ERECTION DRAWINGS ARE AND SHALL REMAIN THE PROPERTY OF MODERN MACHINE SHOP, INC. THESE SHALL NOT BE USED, REPRODUCED, MODIFIED, OR COPIED IN ANY FORM OR MANNER WITHOUT THE EXPRESS, WRITTEN PERMISSION, CONSENT, AND DUE COMPENSATION TO THE FABRICATOR:
MODERN MACHINE SHOP, INC., COPYRIGHT 2013

NOTICE TO CONTRACTORS AND/OR ERECTORS

MODERN MACHINE SHOP, INC. WILL NOT ACCEPT BACKCHARGERS FOR CORRECTIVE WORK OR REPLACED MATERIALS UNLESS AUTHORIZED AND APPROVED. FAILURE TO COMPLY WITH THIS REQUIREMENT WILL BECOME CONTRACTORS/ERECTORS LIABILITY. ANY QUESTIONS CALL (956) 722-4656

DATE: _____ SIGNATURE: _____

REF:E21 THRU E23

ALL RUNNING DIMENSIONS FROM END OF MAIN MATERIAL
ALL VERTICAL SPACING OF HOLES TO BE 3"UNLESS NOTED.
ALL SNIPS TO BE 3/4 X 3/4 UNLESS NOTED.
ALL COPES TO BE RADIUSED.
⊗ DENOTES "CONTACT SURFACE"THIS SIDE OF PLATE.
HOLES IN END PLATES AND OUTSTANDING LEGS OF END CLIPS
X INDICATES LAYOUT MARK FOR FABRICATION
LD=LW,DTI HD=FLT WASHER FL=WROUGHT WASHER
MEMBERS ARE TO BE ERECTED S/O THAT MARKED END IS IN SAME LOCATION AS ON ERECTION DRAWING NO.

NO.	DATE	BY	DESCRIPTION

REV.

CUSTOMER: _____
ARCHITECT: _____
PROJECT: _____
LOCATION: _____

DRWN _____ DATE _____ FOR APPL. _____ ORDER NO. _____
CHKD _____ DATE _____ TO SHOP _____ REV. A DWG. 39

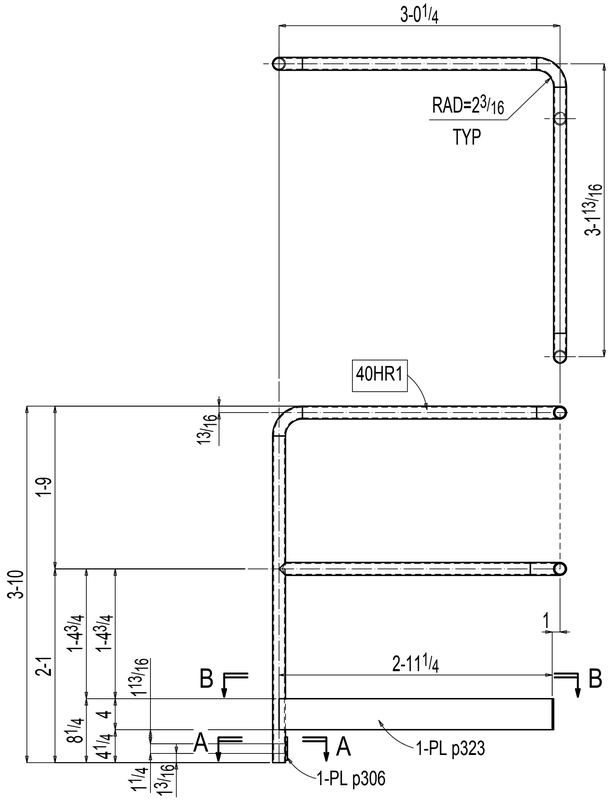

ONE HANDRAIL 40HR1

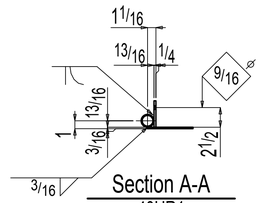

Section A-A
40HR1

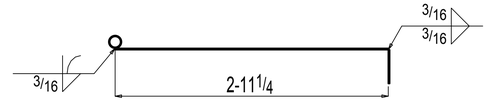

Section B-B
40HR1

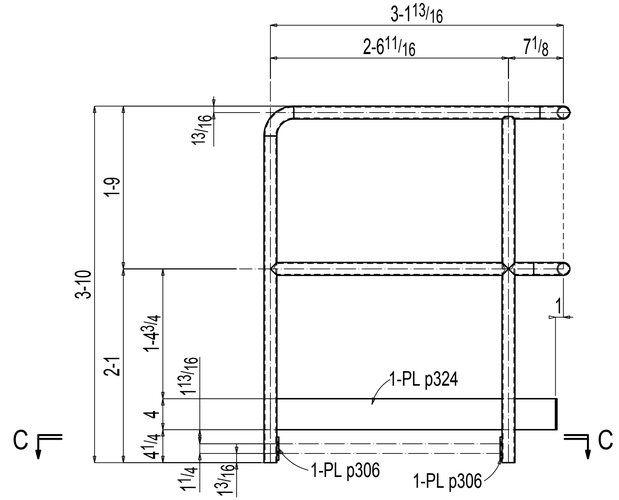

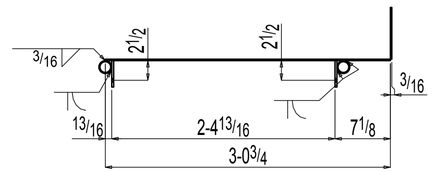

Section C-C
40HR1

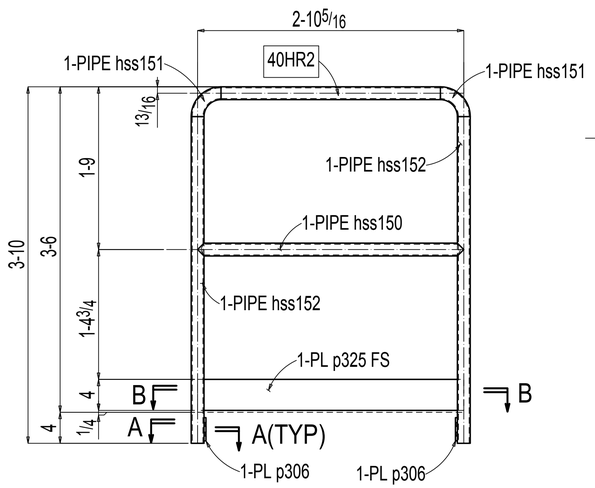

ONE HANDRAIL 40HR2

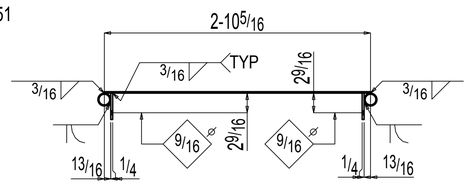

Section B-B
40HR2

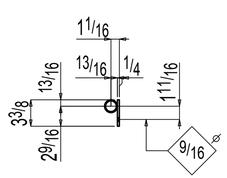

Section A-A
40HR2

BILL OF MATERIAL

MARK	QTY	DESCRIPTION	FT	IN	REMARKS
40HR1	ONE	Hand Rail			
40HR1	1	PIPE 1 1/4 STD	2	6 3/16	A53B
hss195	1	PIPE 1 1/4 STD	3	8 11/16	A53B
hss152	2	PIPE 1 1/4 STD	3	6 1/8	A53B
hss187	1	PIPE 1 1/4 STD	2	8 7/16	A53B
hss183	1	PIPE 1 1/4 STD	2	7 3/4	A53B
hss191	1	PIPE 1 1/4 STD	2	6 11/16	A53B
hss140	1	PIPE 1 1/4 STD	0	7 5/16	A53B
hss151	3	PIPE 1 1/4 STD	0	6 1/16	A53B
hss192	1	PIPE 1 1/4 STD	0	3 1/4	A53B
p306	3	PL 1/4x3	0	3 7/16	A572-50
p324	1	PL 3/16x4	3	0 3/4	A36
p323	1	PL 3/16x4	2	11 1/4	A36
		FIELD BOLTS			
	6	1/2 Dia A325N	0	1 1/2	+1HD WASH
40HR2	ONE	Hand Rail			
40HR2	1	PIPE 1 1/4 STD	2	4 5/16	A53B
hss152	2	PIPE 1 1/4 STD	3	6 1/8	A53B
hss150	1	PIPE 1 1/4 STD	2	10 5/16	A53B
hss151	2	PIPE 1 1/4 STD	0	6 1/16	A53B
p306	2	PL 1/4x3	0	3 7/16	A572-50
p325	1	PL 3/16x4	2	10 5/16	A36
		FIELD BOLTS			
	4	1/2 Dia A325N	0	1 1/2	+1HD WASH

SHOP NOTE:
SURFACE PREP:SSPC-SP2

HOLES: 13/16 DIA U.N.O. FINISH: STD SHOP PRIMER

REV	DATE	DESCRIPTION	BY
A			

CLIENT:

ARCH & ENGR:

JOB NAME:

LOCATION:

DETAIL OF:

DATE: DRAWN BY:

CHECKED BY: JOB #

DWG. # 40 A

BILL OF MATERIAL

NO.	SECTION	FIT.	IN.	TEMP MARK	SHIPPING MARK	WEIGHT UNIT	WEIGHT TOTAL	REMARKS
2	HANDRAIL				40HR1	148	297	
2	PIPE 1 1/4 STD	30	15/16	40HR1		68	137	A53B
2	PIPE 1 1/4 STD	3	31/16	hss356		7	15	A53B
14	PIPE 1 1/4 STD	3	31/16	hss357		7	103	A53B
2	PIPE 1 1/4 STD	3	31/16	hss360		7	15	A53B
2	PIPE 1 1/4 STD	1	01/16	hss361		2	5	A53B
2	PIPE 1 1/4 STD	1	0	hss362		2	5	A53B
2	PIPE 1 1/4 STD	1	0	hss353		2	5	A53B
2	PIPE 1 1/4 STD	1	0	hss355		2	5	A53B
4	PIPE 1 1/4 STD	1	0	hss352		2	9	A53B

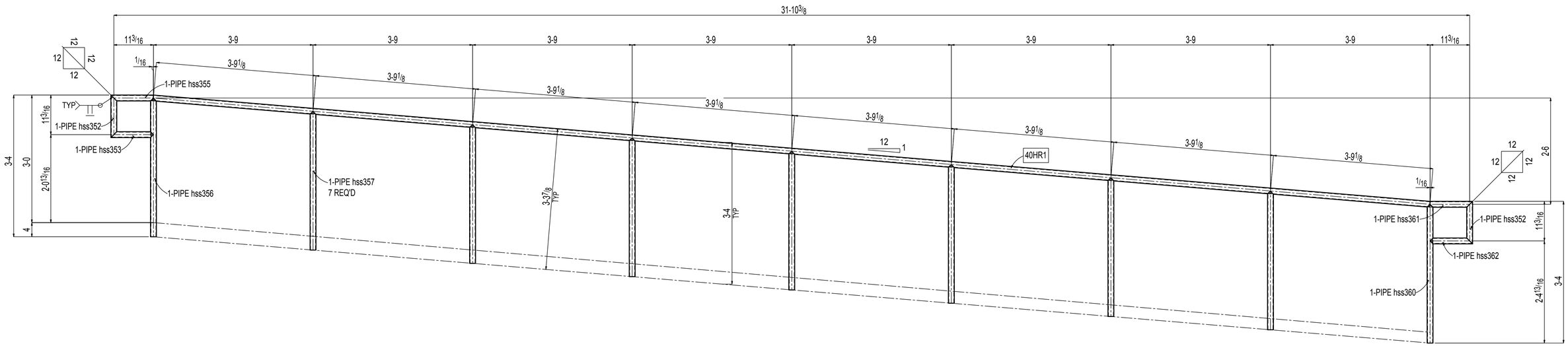

2 HANDRAILS 40HR1

TOTAL WEIGHT THIS DRAWINGS:297

PAINT: 1-S/C PRIMER

OPEN HOLES: 13/16" DIA (UNO) OPEN SLOTS: 13/16x1 DIA (UNO) BOLT: 3/4" DIA A325(UNO) EDGE DIST. 1 1/2"(UNO)

MATERIAL	
WIDE FLANGE	A992 (UNO)
PIPE	A53B (UNO)
TUBE	A500B (UNO)
CHANNEL	A36 (UNO)
PLATE,ANGLE,BAR	A36 (UNO)

REF:E21 THRU E23

ALL RUNNING DIMENSIONS FROM END OF MAIN MATERIAL
ALL VERTICAL SPACING OF HOLES TO BE 3"UNLESS NOTED.
ALL SNIPS TO BE 3/4 X 3/4 UNLESS NOTED.
ALL COPES TO BE RADIUSED.
⊗ - DENOTES "CONTACT SURFACE"THIS SIDE OF PLATE.
HOLES IN END PLATES AND OUTSTANDING LEGS OF END CLIPS
X INDICATES LAYOUT MARK FOR FABRICATION
LD=LW,DTI HD=FLT WASHER FL=WROUGHT WASHER
MEMBERS ARE TO BE ERECTED SO THAT MARKED END IS
IN SAME LOCATION AS ON ERECTION DRAWING NO.

NOTICE TO CONTRACTORS AND/OR ERECTORS

MODERN MACHINE SHOP, INC. WILL NOT
ACCEPT BACKCHARGERS FOR CORRECTIVE
WORK OR REPLACED MATERIALS UNLESS
AUTHORIZED AND APPROVED. FAILURE
TO COMPLY WITH THIS REQUIREMENT
WILL BECOME CONTRACTORS/ERECTORS LIABILITY.
ANY QUESTIONS CALL (956) 722-4656

DATE: _____ SIGNATURE: _____

THESE SHOP AND ERECTION DRAWINGS ARE AND SHALL
REMAIN THE PROPERTY OF MODERN MACHINE SHOP, INC.
THESE SHALL NOT BE USED, REPRODUCED, MODIFIED,
OR COPIED IN ANY FORM OR MANNER WITHOUT THE
EXPRESS, WRITTEN PERMISSION, CONSENT, AND DUE
COMPENSATION TO THE FABRICATOR:
MODERN MACHINE SHOP, INC., COPYRIGHT 2013

NO.	DATE	BY	DESCRIPTION

REV.

CUSTOMER: _____
ARCHITECT: _____
PROJECT: _____
LOCATION: _____

DRWN _____ DATE _____ FOR APPL. _____ ORDER NO. _____
CHKD _____ DATE _____ TO SHOP _____ REV. A DWG. 40

BILL OF MATERIAL

NO.	SECTION	FIT.	IN.	TEMP MARK	SHIPPING MARK	WEIGHT UNIT	WEIGHT TOTAL	REMARKS
2	HANDRAIL				41HR1	39	79	
2	PIPE 1 1/4 STD	6	8 3/8	41HR1		15	30	A53B
2	PIPE 1 1/4 STD	3	4	hss370		8	15	A53B
2	PIPE 1 1/4 STD	3	3 3/16	hss556		7	15	A53B
2	PIPE 1 1/4 STD	1	0 1/2	hss555		2	5	A53B
2	PIPE 1 1/4 STD	1	0	hss353		2	5	A53B
2	PIPE 1 1/4 STD	1	0	hss352		2	5	A53B
2	PIPE 1 1/4 STD	1	0	hss552		2	5	A53B

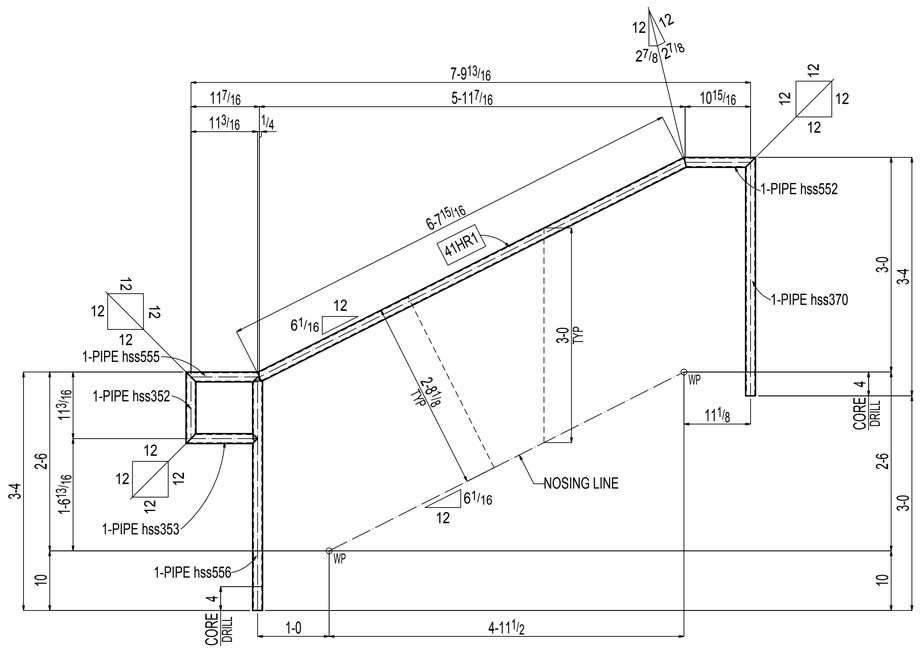

2 HANDRAILS 41HR1

TOTAL WEIGHT THIS DRAWINGS:297

PAINT: 1-S/C PRIMER

OPEN HOLES: 13/16" DIA (UNO) OPEN SLOTS: 13/16x1 DIA (UNO) BOLT: 3/4" DIA A325(UNO) EDGE DIST: 1 1/2"(UNO)

MATERIAL	
WIDE FLANGE	A992 (UNO)
PIPE	A53B (UNO)
TUBE	A500B (UNO)
CHANNEL	A36 (UNO)
PLATE,ANGLE,BAR	A36 (UNO)

THESE SHOP AND ERECTION DRAWINGS ARE AND SHALL REMAIN THE PROPERTY OF MODERN MACHINE SHOP, INC. THESE SHALL NOT BE USED, REPRODUCED, MODIFIED, OR COPIED IN ANY FORM OR MANNER WITHOUT THE EXPRESS, WRITTEN PERMISSION, CONSENT, AND DUE COMPENSATION TO THE FABRICATOR:
MODERN MACHINE SHOP, INC., COPYRIGHT 2013

NOTICE TO CONTRACTORS AND/OR ERECTORS

MODERN MACHINE SHOP, INC. WILL NOT ACCEPT BACKCHARGERS FOR CORRECTIVE WORK OR REPLACED MATERIALS UNLESS AUTHORIZED AND APPROVED. FAILURE TO COMPLY WITH THIS REQUIREMENT WILL BECOME CONTRACTORS/ERECTORS LIABILITY. ANY QUESTIONS CALL (956) 722-4656

DATE: _____ SIGNATURE: _____

REF:E21 THRU E23

ALL RUNNING DIMENSIONS FROM END OF MAIN MATERIAL.
ALL VERTICAL SPACING OF HOLES TO BE 3"UNLESS NOTED.
ALL SNIPS TO BE 3/8 X 3/4 UNLESS NOTED.
ALL COPES TO BE RADIUSED.
⊗ DENOTES "CONTACT SURFACE"THIS SIDE OF PLATE.
HOLES IN END PLATES AND OUTSTANDING LEGS OF END CLIPS
X INDICATES LAYOUT MARK FOR FABRICATION
LD=LIW,DTI HD=FLT WASHER FL=WROUGHT WASHER
MEMBERS ARE TO BE ERECTED SO THAT MARKED END IS IN SAME LOCATION AS ON ERECTION DRAWING NO.

NO.	DATE	BY	DESCRIPTION

REV.

CUSTOMER: _____
ARCHITECT: _____
PROJECT: _____
LOCATION: _____

DRWN _____ DATE _____ FOR APPL. _____ ORDER NO. _____
CHKD _____ DATE _____ TO SHOP _____ REV. A DWG. 41

BILL OF MATERIAL

NO.	SECTION	FIT.	IN.	TEMP MARK	SHIPPING MARK	WEIGHT UNIT	WEIGHT TOTAL	REMARKS
ONE	WALL RAIL				82HR1	24	24	
1	PIPE 1 1/4 STD	7	8 1/2	82HR1L		17	17	A53B
1	PIPE 1 1/4 STD	1	0	hss566		2	2	A53B
2	PIPE 1 1/4 STD	0	2 9/16	hss529		0	1	A53B
3	WAGNER BRACKET			m5		1	3	WANGER#3418
2	RPL 1/4x11 11/16			p668		0	0	A36
	FIELD BOLTS							
3	3/8 Dia LAG SCREW	0	2 1/2					

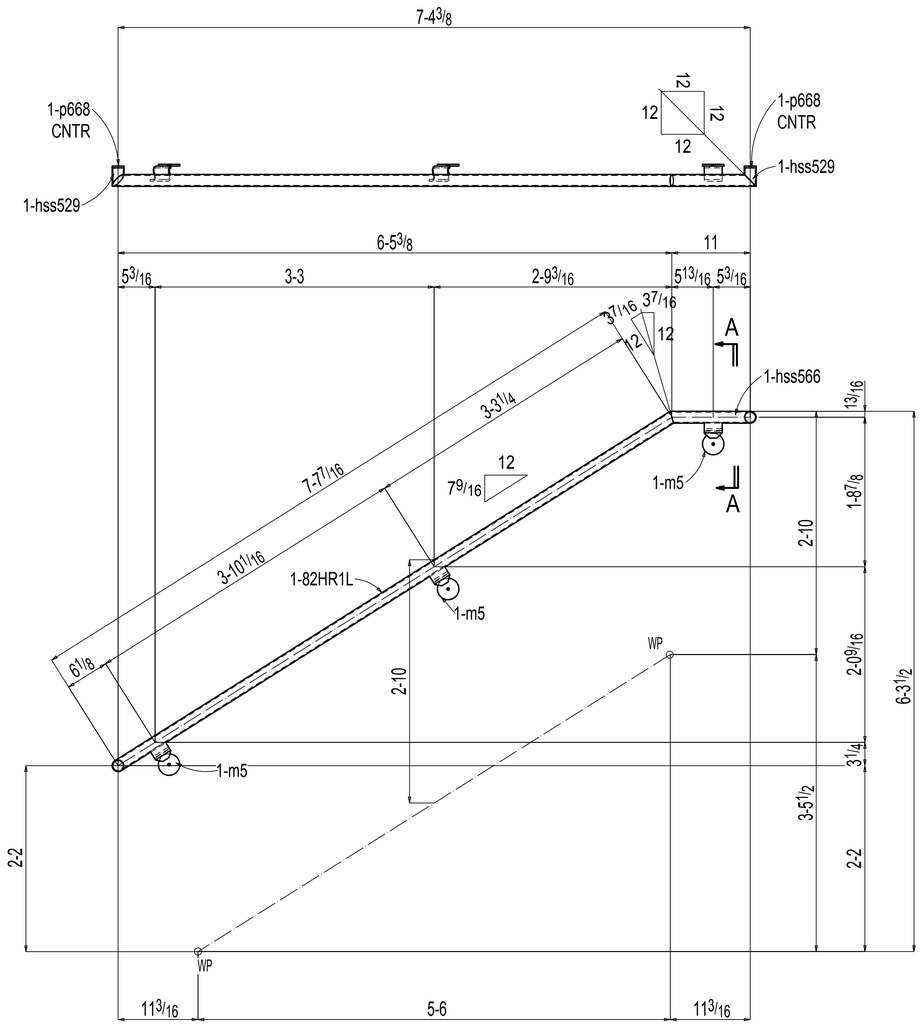

ONE WALL RAIL 82HR1

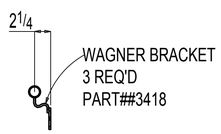

Section A-A
82HR1

TOTAL WEIGHT THIS DRAWINGS:38

PAINT: ONE SHOP COAT OF GRAY PRIMER
OPEN HOLES: 13/16" DIA (UNO) OPEN SLTS: 13/16x1 DIA (UNO) BOLT: 3/4" DIA A325(UNO) EDGE DIST. 1 1/2"(UNO)

MATERIAL	
WIDE FLANGE	A992 (UNO)
PIPE	A53B (UNO)
TUBE	A500B (UNO)
CHANNEL	A36 (UNO)
PLATE,ANGLE,BAR	A36 (UNO)

REF:E24 THRU E39

ALL RUNNING DIMENSIONS FROM END OF MAIN MATERIAL.
ALL VERTICAL SPACING OF HOLES TO BE 3"UNLESS NOTED.
ALL SNIPS TO BE 3/4 X 3/4 UNLESS NOTED.
ALL COPES TO BE RADIUSED.
⊗ - DENOTES "CONTACT SURFACE"THIS SIDE OF PLATE.
HOLES IN END PLATES AND OUTSTANDING LEGS OF END CLIPS
X INDICATES LAYOUT MARK FOR FABRICATION
LD=LIW,DTI HD=FLT WASHER FL=WROUGHT WASHER
MEMBERS ARE TO BE ERECTED SO THAT MARKED END IS
IN SAME LACATION AS ON ERECTION DRAWING NO.

NO.	DATE	REV	DESCRIPTION

REV.

NOTICE TO CONTRACTORS AND/OR ERECTORS

MODERN MACHINE SHOP, INC. WILL NOT ACCEPT BACKCHARGERS FOR CORRECTIVE WORK OR REPLACED MATERIALS UNLESS AUTHORIZED AND APPROVED. FAILURE TO COMPLY WITH THIS REQUIREMENT WILL BECOME CONTRACTORS/ERECTORS LIABILITY. ANY QUESTIONS CALL (956) 722-4656

DATE: _____ SIGNATURE: _____

THESE SHOP AND ERECTION DRAWINGS ARE AND SHALL REMAIN THE PROPERTY OF MODERN MACHINE SHOP, INC. THESE SHALL NOT BE USED, REPRODUCED, MODIFIED, OR COPIED IN ANY FORM OR MANNER WITHOUT THE EXPRESS, WRITTEN PERMISSION, CONSENT, AND DUE COMPENSATION TO THE FABRICATOR:
MODERN MACHINE SHOP, INC., COPYRIGHT 2013

CUSTOMER: _____
ARCHITECT: _____
PROJECT: _____
LOCATION: _____

DRWN _____ DATE _____ FOR APPL. _____ ORDER NO. _____
CHKD _____ DATE _____ TO SHOP _____ REV. _____ DWG. 82

BILL OF MATERIAL

NO.	SECTION	FIT.	IN.	TEMP MARK	SHIPPING MARK	WEIGHT UNIT	WEIGHT TOTAL	REMARKS
ONE	WALL RAIL				85HR1	23	23	
1	PIPE 1 1/4 STD	7	8 1/2	85HR1L		17	17	A53B
1	PIPE 1 1/4 STD	0	5 1/8	hss545		1	1	A53B
1	PIPE 1 1/4 STD	0	4 1/8	hss546		1	1	A53B
1	PIPE 1 1/4 STD	0	2 9/16	hss531		0	0	A53B
3	WAGNER BRACKET			m5		1	3	WANGER#3418
1	RPL 1/4x11 11/16			p668		0	0	A36
	FIELD BOLTS							
3	3/8 Dia LAG SCREW	0	2 1/2					

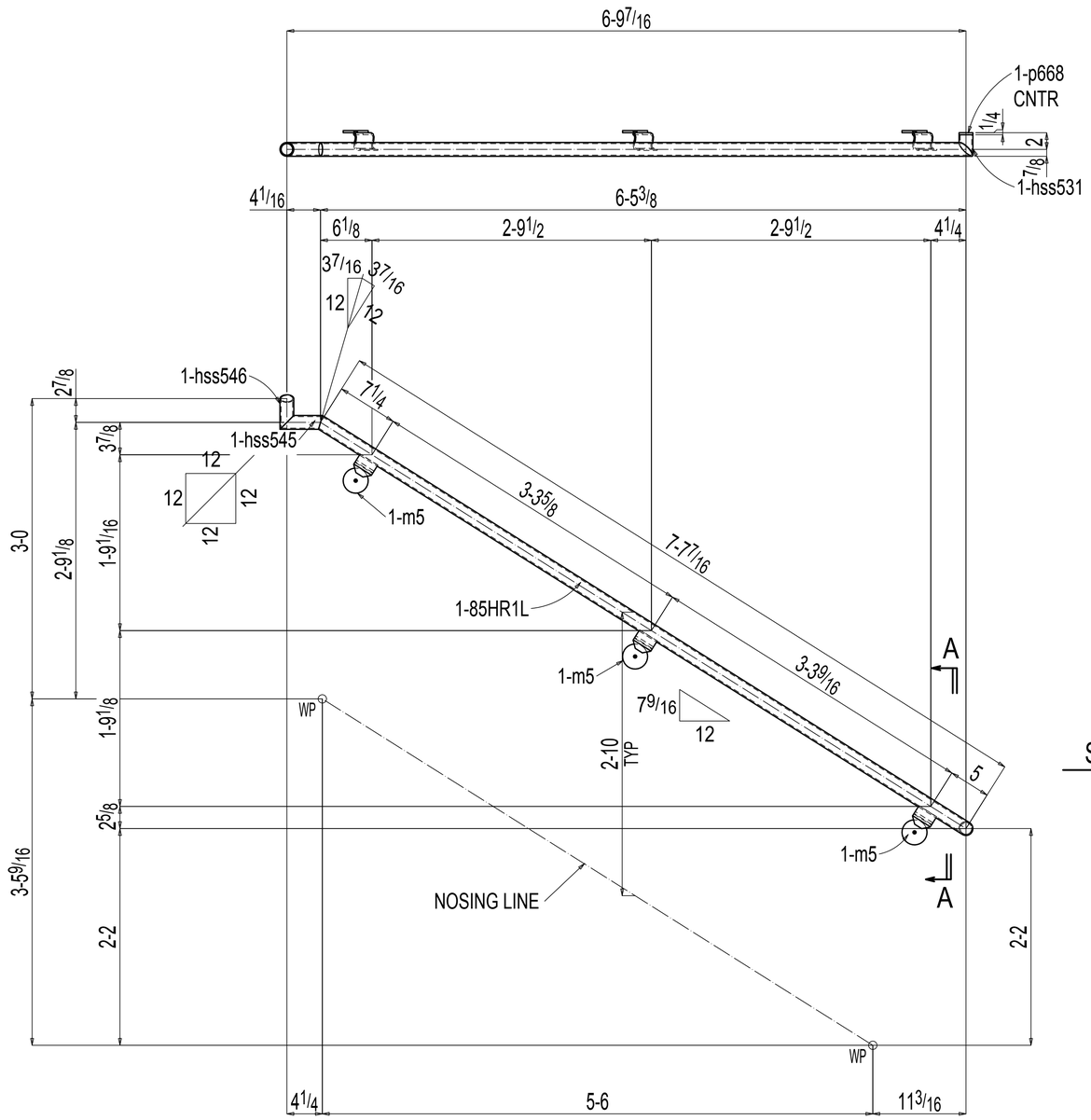

ONE WALL RAIL 85HR1

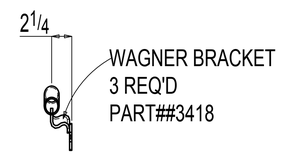

Section A-A
85HR1

TOTAL WEIGHT THIS DRAWINGS:23

PAINT: ONE SHOP COAT OF GRAY PRIMER

OPEN HOLES: 13/16" DIA (UNO) OPEN SLOTS: 13/16x1 DIA (UNO) BOLT: 3/4" DIA A325(UNO) EDGE DIST: 1 1/2"(UNO)

MATERIAL	
WIDE FLANGE	A992 (UNO)
PIPE	A53B (UNO)
TUBE	A500B (UNO)
CHANNEL	A36 (UNO)
PLATE,ANGLE,BAR	A36 (UNO)

THESE SHOP AND ERECTION DRAWINGS ARE AND SHALL REMAIN THE PROPERTY OF MODERN MACHINE SHOP, INC. THESE SHALL NOT BE USED, REPRODUCED, MODIFIED, OR COPIED IN ANY FORM OR MANNER WITHOUT THE EXPRESS, WRITTEN PERMISSION, CONSENT, AND DUE COMPENSATION TO THE FABRICATOR:
MODERN MACHINE SHOP, INC., COPYRIGHT 2013

NOTICE TO CONTRACTORS AND/OR ERECTORS

MODERN MACHINE SHOP, INC. WILL NOT ACCEPT BACKCHARGERS FOR CORRECTIVE WORK OR REPLACED MATERIALS UNLESS AUTHORIZED AND APPROVED. FAILURE TO COMPLY WITH THIS REQUIREMENT WILL BECOME CONTRACTORS/ERECTORS LIABILITY. ANY QUESTIONS CALL (956) 722-4556

DATE: _____ SIGNATURE: _____

REF:E24 THRU E39

ALL RUNNING DIMENSIONS FROM END OF MAIN MATERIAL.
ALL VERTICAL SPACING OF HOLES TO BE 3"UNLESS NOTED.
ALL SNIPS TO BE 3/4 X 3/4 UNLESS NOTED.
ALL COPES TO BE RADUSED.
⊗ DENOTES "CONTACT SURFACE"THIS SIDE OF PLATE.
HOLES IN END PLATES AND OUTSTANDING LEGS OF END CLIPS
X INDICATES LAYOUT MARK FOR FABRICATION
LD-LW DTI HD+FLT WASHER FLWROUGHT WASHER
MEMBERS ARE TO BE ERECTED SO THAT MARKED END IS IN SAME LACATION AS ON ERECTION DRAWING NO.

NO	DATE	BY	DESCRIPTION

REV.

CUSTOMER: _____
ARCHITECT: _____
PROJECT: _____
LOCATION: _____

DRWN _____ DATE _____ FOR APPL. _____ ORDER NO. _____
CHKD _____ DATE _____ TO SHOP _____ REV. A DWG. 85

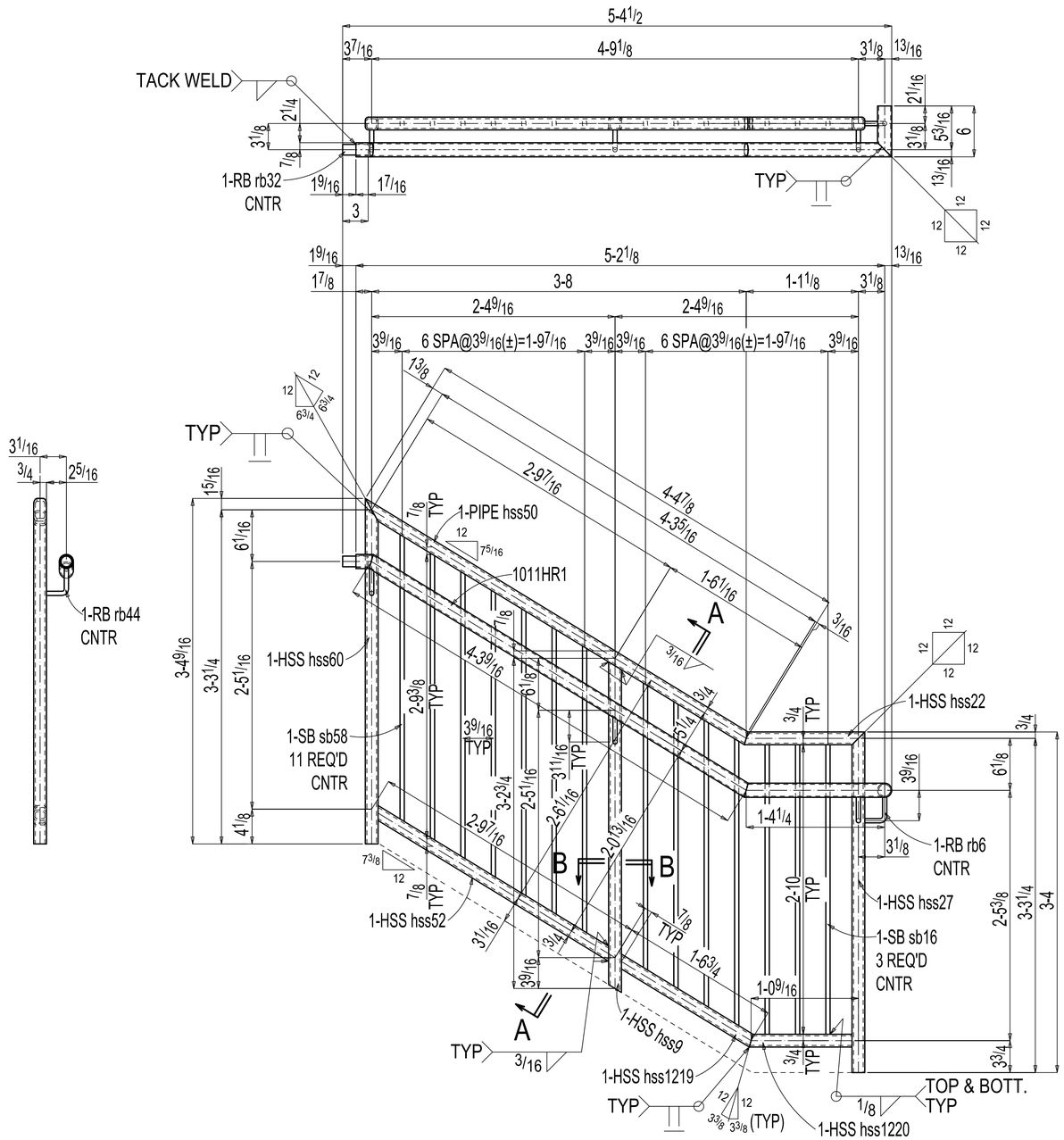

ONE HANDRAIL 1011HR1

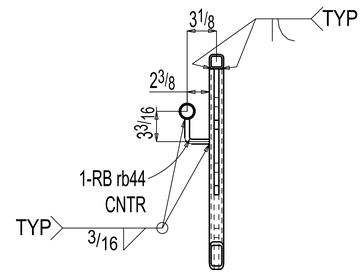

Section A-A

1011HR1

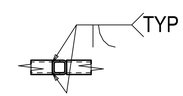

Section B-B

1011HR1

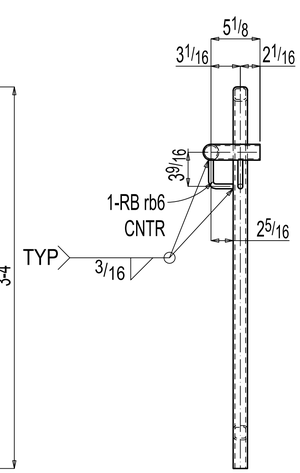

BILL OF MATERIAL

QTY TOTAL	PC MARK	DESCRIPTION	LENGTH		REMARKS	WEIGHT TOTAL	ADVANCE MILL #
ONE	1011HR1	HANDRAIL				131	
1	1011HR1	PIPE 11 1/4 SCH 40	7	0	L.F. A53B	16	
1	hss50	HSS1 1/2x1 1/2x3/16	4	5 1/16	A500B	16	
1	hss60	HSS1 1/2x1 1/2x3/16	3	4 9/16	A500B	12	
1	hss27	HSS1 1/2x1 1/2x3/16	3	4	A500B	12	
1	hss9	HSS1 1/2x1 1/2x3/16	3	2 13/16	A500B	12	
1	hss52	HSS1 1/2x1 1/2x3/16	2	8 5/8	A500B	10	
1	hss1219	HSS1 1/2x1 1/2x3/16	1	6 1/2	A500B	6	
1	hss22	HSS1 1/2x1 1/2x3/16	1	2 1/8	A500B	4	
1	hss1220	HSS1 1/2x1 1/2x3/16	1	0 1/16	A500B	4	
2	rb6	RB1/2	0	5 1/8	A36	2	
2	rb44	RB1/2	0	5 3/16	A36	2	
1	rb32	RB1 1/4	0	3	A36	1	
3	sb16	SB1/2	2	10	A36	7	
11	sb58	SB1/2	2	9 11/16	A36	26	

Total weight : 131

NO	REVISION	BY	DATE
0	FOR FABRICATION	SDL-JAL	12 / 10 / 2024

SCG PROJECT: --- PFG PROJECT: --- STEEL FAB:

CLIENT / PROJECT: PRINCETON HOBSON COLLEGE

PRINCETON, NJ

ITEM # 2 | DWG TITLE: - HANDRAIL DETAIL

HOLES: Ø13/16 UNO | PIPES: A53B

ELECTRODES: 70XXX UNO | TUBES: A500B | SCALE: -- | DRAWING: -

BEAMS: A992 | FINISH: PRIME PAINTED | DWN. BY: | DATE: - 12-10-2024

ANGLE, CHANNELS, PLATES & BARS: A36 | CHK'D. BY: | DATE: - 12-10-2024

1011

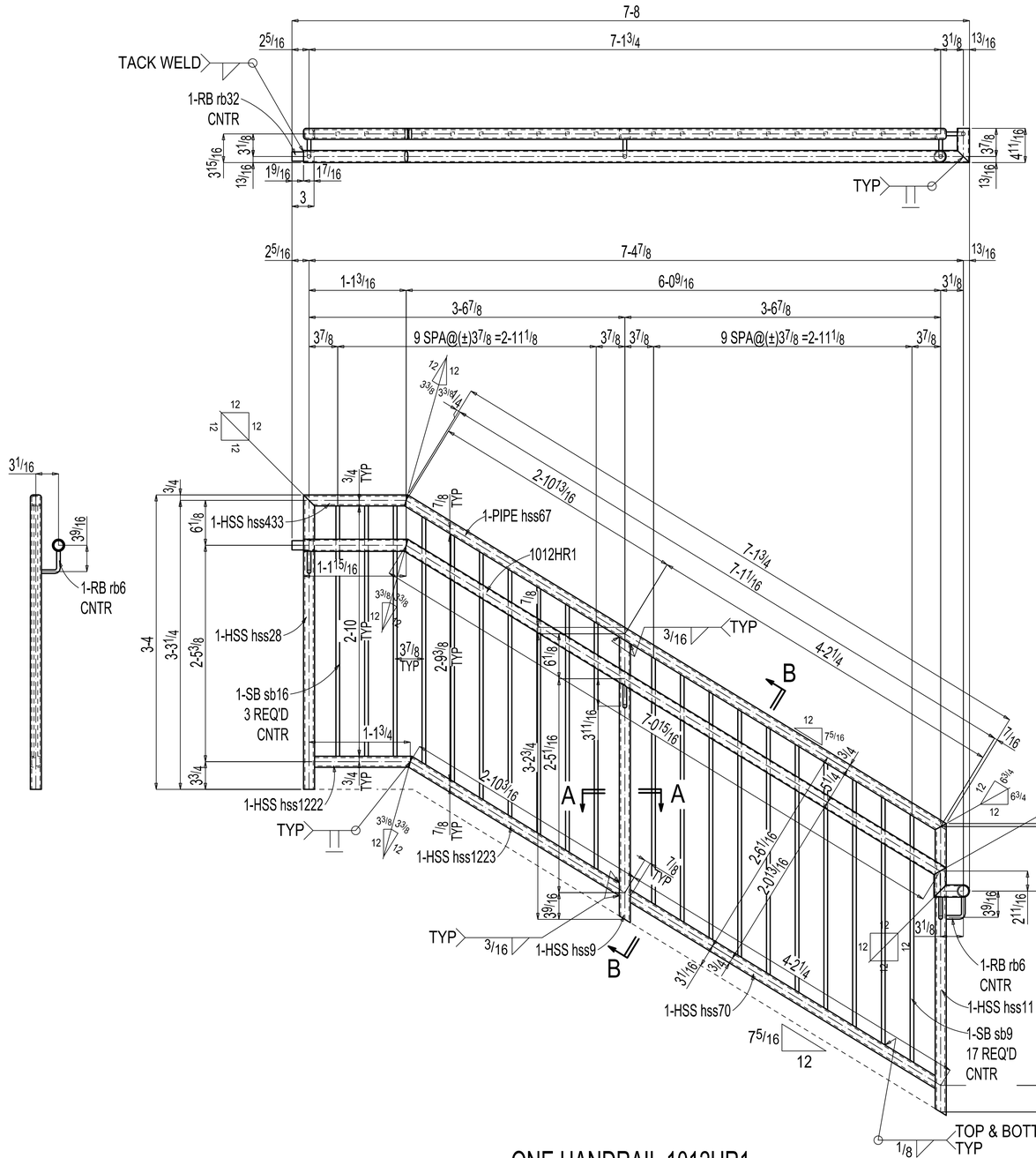

ONE HANDRAIL 1012HR1

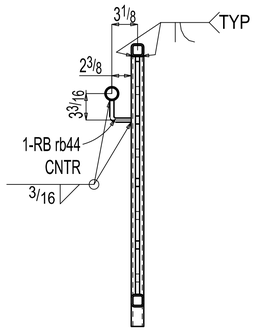

Section B-B
1012HR1

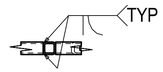

Section A-A
1012HR1

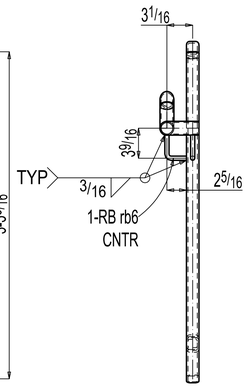

BILL OF MATERIAL

QTY TOTAL	PC MARK	DESCRIPTION	LENGTH		REMARKS	WEIGHT TOTAL	ADVANCE MILL #
ONE	1012HR1	HANDRAIL				172	
1	1012HR1	PIPE 1 1/4 SCH 40	10	0	L.F. A53B	23	
1	hss67	HSS1 1/2x1 1/2x3/16	7	1 11/16	A500B	26	
1	hss70	HSS1 1/2x1 1/2x3/16	4	1 7/16	A500B	15	
1	hss28	HSS1 1/2x1 1/2x3/16	3	4	A500B	12	
1	hss11	HSS1 1/2x1 1/2x3/16	3	3 5/8	A500B	12	
1	hss9	HSS1 1/2x1 1/2x3/16	3	2 13/16	A500B	12	
1	hss1223	HSS1 1/2x1 1/2x3/16	2	9 15/16	A500B	10	
1	hss433	HSS1 1/2x1 1/2x3/16	1	2 1/8	A500B	4	
1	hss1222	HSS1 1/2x1 1/2x3/16	1	1 3/16	A500B	4	
3	rb6	RB 1/2	0	5 1/8	A36	3	
1	rb44	RB 1/2	0	5 3/16	A36	1	
1	rb32	RB1 1/4	0	3	A36	1	
3	sb16	SB 1/2	2	10	A36	7	
17	sb9	SB 1/2	2	9 11/16	A36	40	

Total weight : 172

0	FOR FABRICATION	SDL-JAL	12 / 10 / 2024
NO	REVISION	BY	DATE

SCG PROJECT: --- PFG PROJECT: --- STEEL FAB:

CLIENT / PROJECT: PRINCETON HOBSON COLLEGE

PRINCETON, NJ

ITEM # 2		DWG TITLE: - HANDRAIL DETAIL		
HOLES: Ø13/16 UNO	PIPES: A53B			
ELECTRODES: 70XXX UNO	TUBES: A500B	SCALE: --		DRAWING: -
BEAMS: A992	FINISH: PRIME PAINTED	DWN. BY:	DATE: - 12-10-2024	1012
ANGLE, CHANNELS, PLATES & BARS: A36		CHK'D. BY:	DATE: - 12-10-2024	

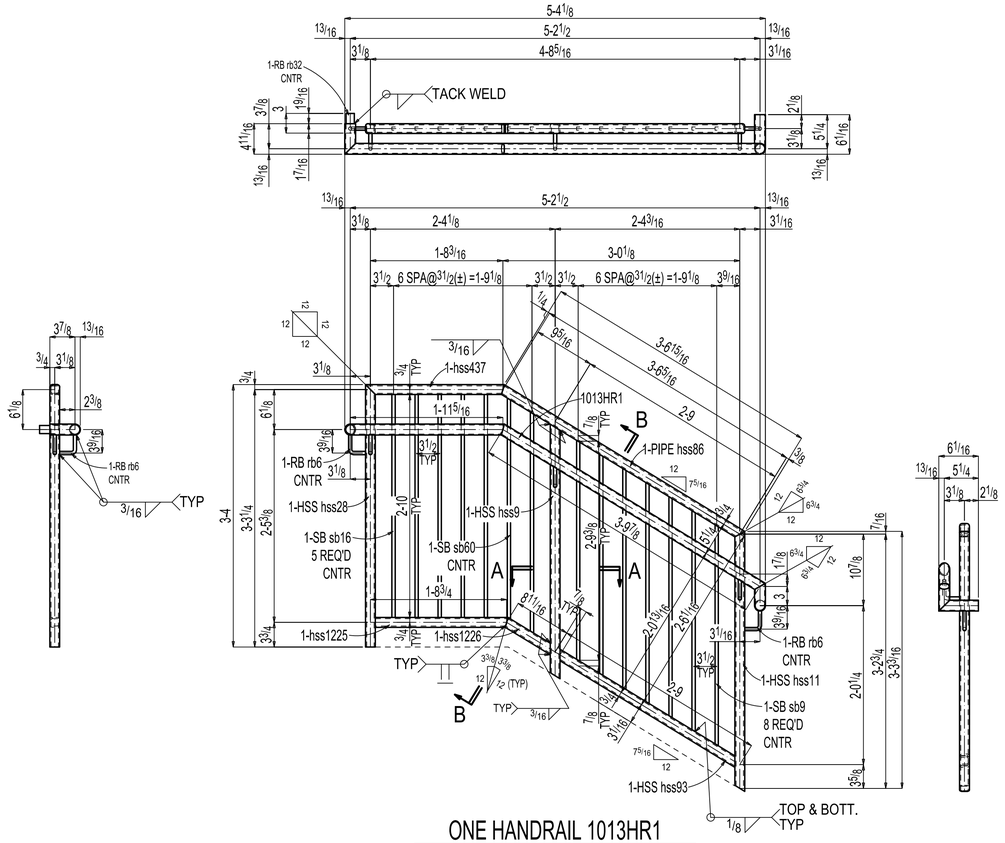

ONE HANDRAIL 1013HR1

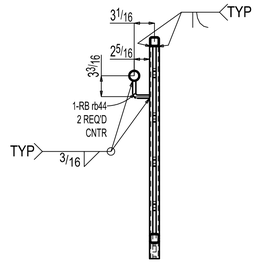

Section B-B
1013HR1

Section A-A
1013HR1

BILL OF MATERIAL

QTY TOTAL	PC MARK	DESCRIPTION	LENGTH		REMARKS	WEIGHT TOTAL	ADVANCE MILL #
ONE	1013HR1	HANDRAIL				141	
1	1013HR1	PIPE 1 1/4 SCH 40	12	0	L.F. A53B	27	
1	hss86	HSS1 1/2x1 1/2x3/16	3	6 15/16	A500B	13	
1	hss28	HSS1 1/2x1 1/2x3/16	3	4	A500B	12	
1	hss11	HSS1 1/2x1 1/2x3/16	3	3 5/8	A500B	12	
1	hss9	HSS1 1/2x1 1/2x3/16	3	2 13/16	A500B	12	
1	hss93	HSS1 1/2x1 1/2x3/16	2	8 1/8	A500B	10	
1	hss437	HSS1 1/2x1 1/2x3/16	1	9 1/8	A500B	6	
1	hss1225	HSS1 1/2x1 1/2x3/16	1	8 1/4	A500B	6	
1	hss1226	HSS1 1/2x1 1/2x3/16	0	8 7/16	A500B	3	
3	rb6	RB1/2	0	5 1/8	A36	3	
2	rb44	RB1/2	0	5 3/16	A36	2	
1	rb32	RB1 1/4	0	3	A36	1	
5	sb16	SB1/2	2	10	A36	12	
1	sb60	SB1/2	2	9 11/16	A36	2	
8	sb9	SB1/2	2	9 11/16	A36	19	
ONE	1013HR2	HANDRAIL				146	
1	1013HR2	PIPE 1 1/4 SCH 40	7	6	L.F. A53B	17	
1	hss1260	HSS1 1/2x1 1/2x3/16	7	3 9/16	A500B	27	
2	hss530	HSS1 1/2x1 1/2x3/16	3	2 1/2	A500B	24	
3	hss1258	HSS1 1/2x1 1/2x3/16	2	4 1/8	A500B	26	
2	rb6	RB1/2	0	5 1/8	A36	1	
1	rb32	RB1 1/4	0	3	A36	1	
21	sb16	SB1/2	2	10	A36	51	

Total weight : 287

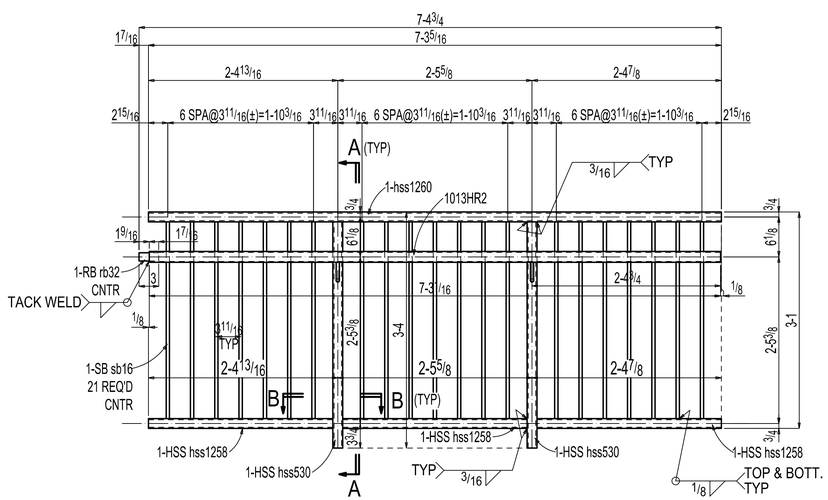

ONE HANDRAIL 1013HR2

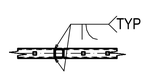

Section B-B
1013HR2

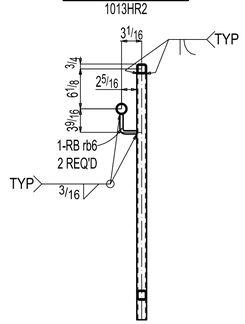

Section A-A
1013HR2

NO	REVISION	BY	DATE
0	FOR FABRICATION	SDL-JAL	12 / 10 / 2024

SCG PROJECT: --- PFG PROJECT: --- STEEL FAB:

CLIENT / PROJECT: PRINCETON HOBSON COLLEGE

PRINCETON, NJ

ITEM # 2		DWG TITLE: - HANDRAIL DETAIL	
HOLES: Ø13/16 UNO	PIPES: A53B		
ELECTRODES: 70XXX UNO	TUBES: A500B	SCALE: --	DRAWING: -
BEAMS: A992	FINISH: PRIME PAINTED	DWN. BY: DATE: - 12-10-2024	1013
ANGLE, CHANNELS, PLATES & BARS: A36		CHK'D. BY: DATE: - 12-10-2024	

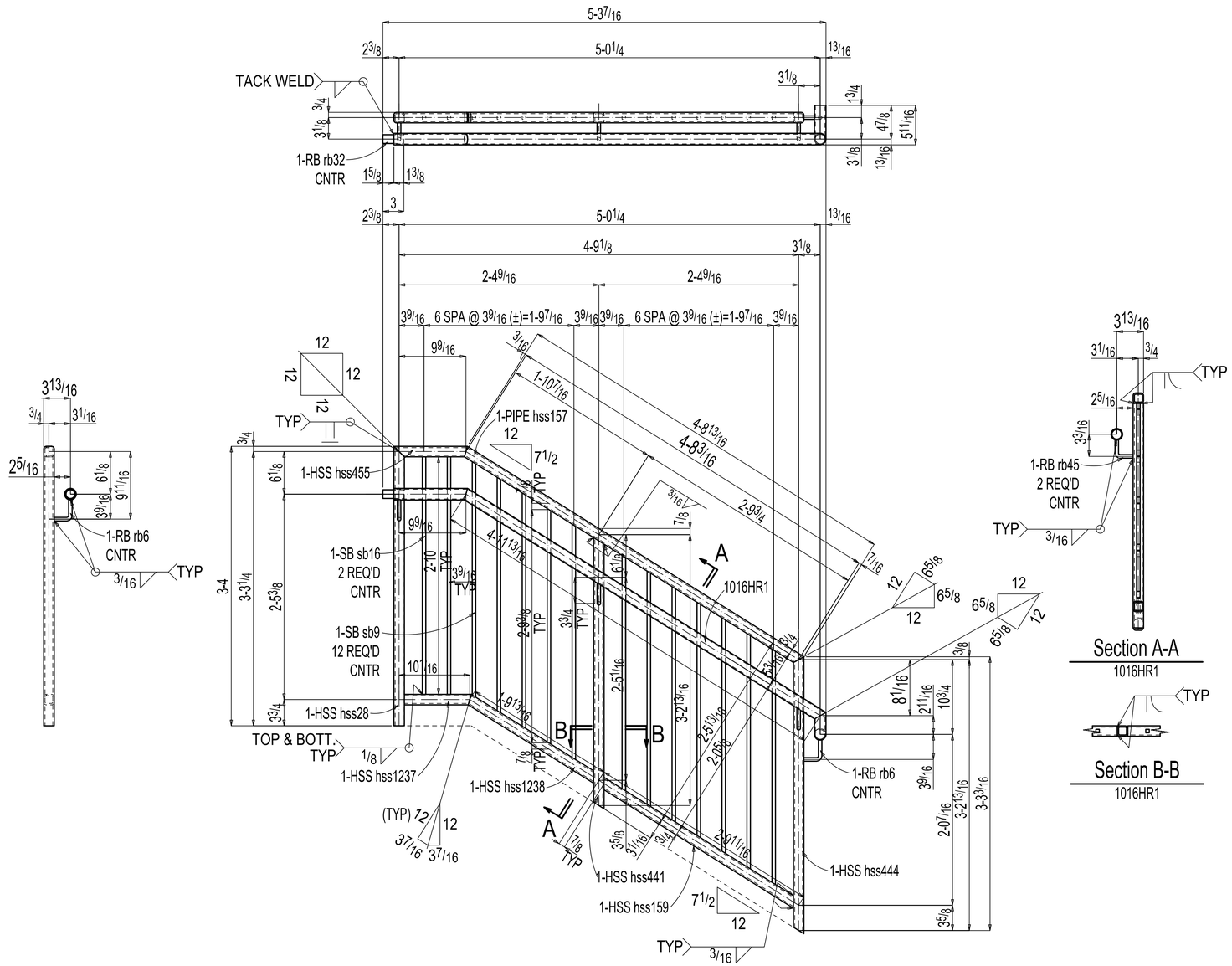

ONE HANDRAIL 1016HR1

BILL OF MATERIAL

QTY TOTAL	PC MARK	DESCRIPTION	LENGTH		REMARKS	WEIGHT TOTAL	ADVANCE MILL #
ONE	1016HR1	HANDRAIL				132	
1	1016HR1	PIPE 1 1/4 SCH 40	7	6	L.F. A53B	17	
1	hss157	HSS1 1/2x1 1/2x3/16	4	8 13/16	A500B	17	
1	hss28	HSS1 1/2x1 1/2x3/16	3	4	A500B	12	
1	hss444	HSS1 1/2x1 1/2x3/16	3	3 5/8	A500B	12	
1	hss441	HSS1 1/2x1 1/2x3/16	3	2 13/16	A500B	12	
1	hss159	HSS1 1/2x1 1/2x3/16	2	8 7/8	A500B	10	
1	hss1238	HSS1 1/2x1 1/2x3/16	1	9 9/16	A500B	7	
1	hss455	HSS1 1/2x1 1/2x3/16	0	10 1/2	A500B	3	
1	hss1237	HSS1 1/2x1 1/2x3/16	0	9 9/16	A500B	3	
2	rb6	RB 1/2	0	5 1/8	A36	2	
2	rb45	RB 1/2	0	5 1/4	A36	2	
1	rb32	RB 1 1/4	0	3	A36	1	
2	sb16	SB 1/2	2	10	A36	5	
12	sb9	SB 1/2	2	9 11/16	A36	28	

Total weight : 132

NO	REVISION	BY	DATE
0	FOR FABRICATION	SDL-JAL	12 / 10 / 2024

SCG PROJECT: --- PFG PROJECT: --- STEEL FAB:

CLIENT / PROJECT: PRINCETON HOBSON COLLEGE

PRINCETON, NJ

ITEM # 2 | DWG TITLE: - HANDRAIL DETAIL

HOLES: Ø 13/16 UNO | PIPES: A53B

ELECTRODES: 70XXX UNO | TUBES: A500B | SCALE: -- | DRAWING: -

BEAMS: A992 | FINISH: PRIME PAINTED | DWN. BY: | DATE: - 12-10-2024

ANGLE, CHANNELS, PLATES & BARS: A36 | CHK'D. BY: | DATE: - 12-10-2024

1016

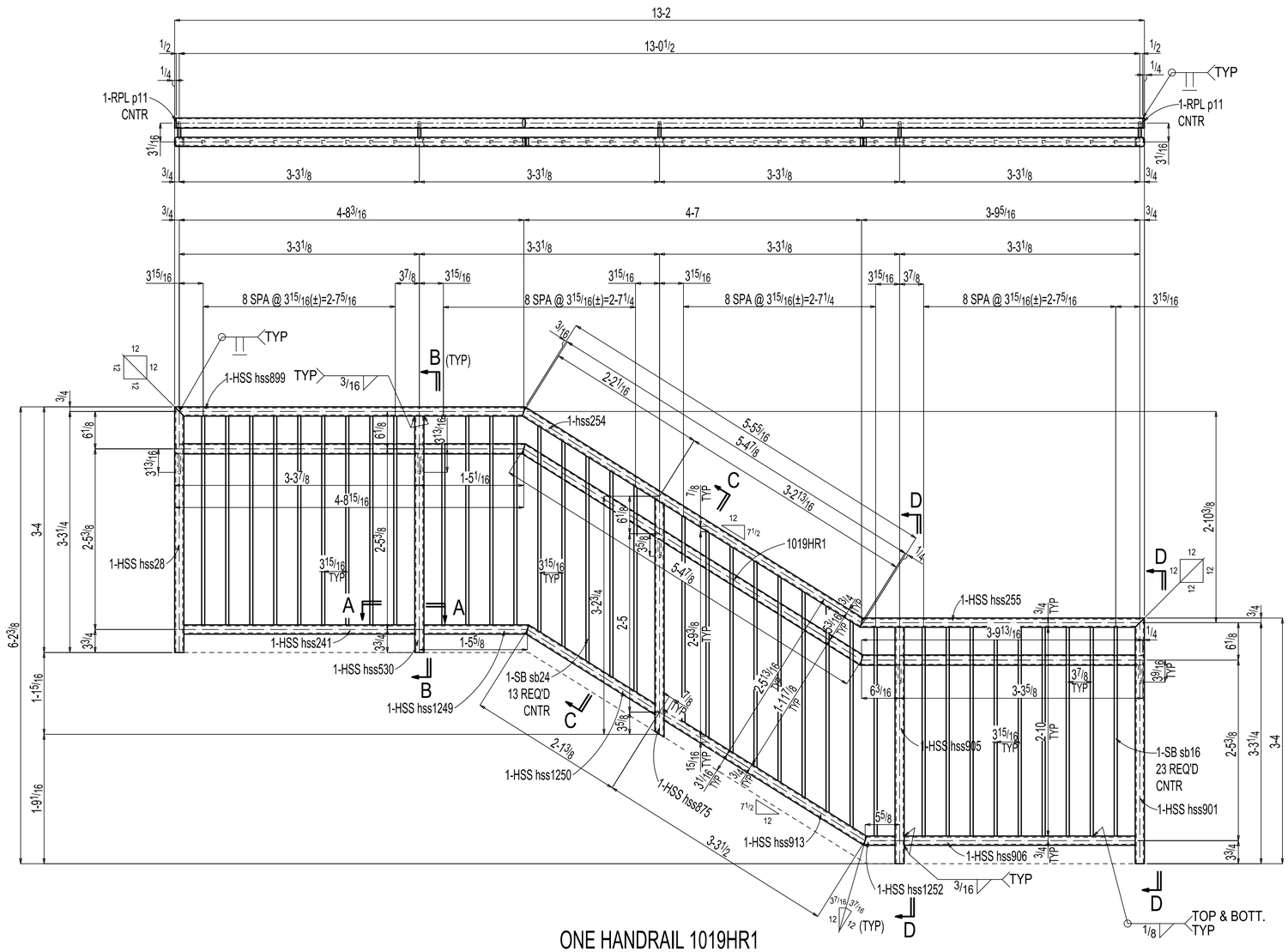

ONE HANDRAIL 1019HR1

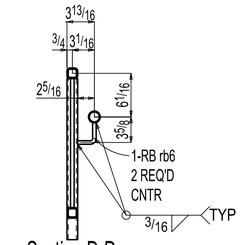

Section D-D
1019HR1

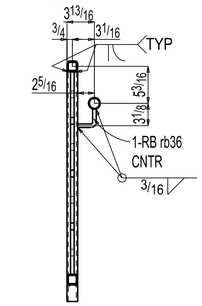

Section C-C
1019HR1

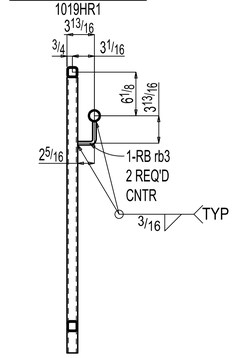

Section B-B
1019HR1

Section A-A
1019HR1

BILL OF MATERIAL

QTY TOTAL	PC MARK	DESCRIPTION	LENGTH		REMARKS	WEIGHT TOTAL	ADVANCE MILL #
ONE	1019HR1	HANDRAIL				286	
1	1019HR1	PIPE 11 1/4 SCH 40	15	0	L.F. A53B	34	
1	hss254	HSS1 1/2x1 1/2x3/16	5	5 5/16	A500B	20	
1	hss899	HSS1 1/2x1 1/2x3/16	4	9 1/8	A500B	18	
1	hss255	HSS1 1/2x1 1/2x3/16	3	10 1/4	A500B	14	
1	hss28	HSS1 1/2x1 1/2x3/16	3	4	A500B	12	
1	hss901	HSS1 1/2x1 1/2x3/16	3	4	A500B	12	
1	hss913	HSS1 1/2x1 1/2x3/16	3	3 5/16	A500B	12	
1	hss875	HSS1 1/2x1 1/2x3/16	3	2 13/16	A500B	12	
1	hss530	HSS1 1/2x1 1/2x3/16	3	2 1/2	A500B	12	
1	hss905	HSS1 1/2x1 1/2x3/16	3	2 1/2	A500B	12	
1	hss241	HSS1 1/2x1 1/2x3/16	3	1 9/8	A500B	12	
1	hss906	HSS1 1/2x1 1/2x3/16	3	1 9/8	A500B	12	
1	hss1250	HSS1 1/2x1 1/2x3/16	2	1 3/16	A500B	8	
1	hss1249	HSS1 1/2x1 1/2x3/16	1	5 1/16	A500B	5	
1	hss1252	HSS1 1/2x1 1/2x3/16	0	5 1/16	A500B	2	
2	rb3	RB1/2	0	5 5/16	A36	2	
1	rb36	RB1/2	0	5 3/16	A36	1	
2	rb6	RB1/2	0	5 1/8	A36	1	
2	p11	RPL1/4x11 11/16			A36	0	
23	sb16	SB1/2	2	10	A36	55	
13	sb24	SB1/2	2	9 11/16	A36	31	

Total weight : 286

NO	REVISION	BY	DATE
0	FOR FABRICATION	SDL-JAL	12 / 10 / 2024

SCG PROJECT: --- PFG PROJECT: --- STEEL FAB:

CLIENT / PROJECT: PRINCETON HOBSON COLLEGE

PRINCETON, NJ

ITEM # 2 | DWG TITLE: - HANDRAIL DETAIL

HOLES: Ø13/16 UNO | PIPES: A53B

ELECTRODES: 70XXX UNO | TUBES: A500B | SCALE: -- | DRAWING: -

BEAMS: A992 | FINISH: PRIME PAINTED | DWN. BY: | DATE: - 12-10-2024

ANGLE, CHANNELS, PLATES & BARS: A36 | CHK'D. BY: | DATE: - 12-10-2024

1019

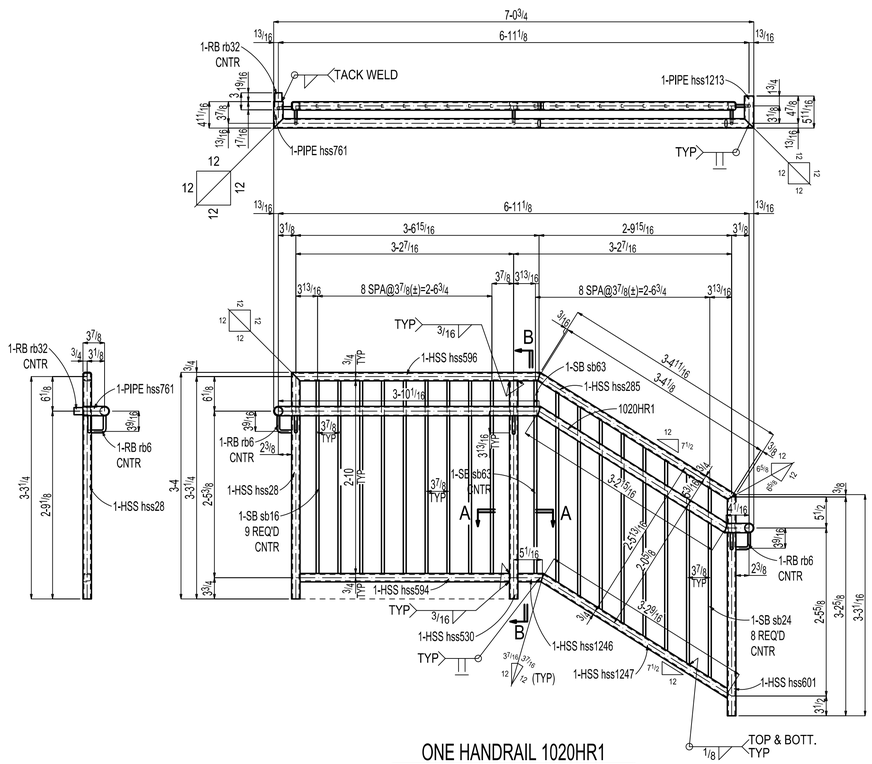

ONE HANDRAIL 1020HR1

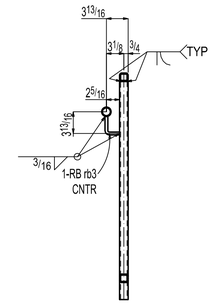

Section B-B
1020HR1

Section A-A
1020HR1

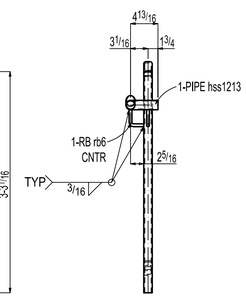

BILL OF MATERIAL

QTY TOTAL	PC MARK	DESCRIPTION	LENGTH		REMARKS	WEIGHT TOTAL	ADVANCE MILL #
ONE	1020HR1	HANDRAIL				157	
1	1020HR1	PIPE 1 1/4 SCH 40	9	6	L.F. A53B	22	
1	hss285	HSS1 1/2x1 1/2x3/16	3	4 3/4	A500B	12	
1	hss596	HSS1 1/2x1 1/2x3/16	3	7 7/8	A500B	13	
1	hss28	HSS1 1/2x1 1/2x3/16	3	4	A500B	12	
1	hss1247	HSS1 1/2x1 1/2x3/16	3	3 9/16	A500B	12	
1	hss601	HSS1 1/2x1 1/2x3/16	3	3 1/16	A500B	12	
1	hss530	HSS1 1/2x1 1/2x3/16	3	2 1/2	A500B	12	
1	hss594	HSS1 1/2x1 1/2x3/16	3	0 15/16	A500B	11	
1	hss1246	HSS1 1/2x1 1/2x3/16	0	4 1/2	A500B	1	
1	rb3	RB 1/2	0	5 5/16	A36	1	
4	rb6	RB 1/2	0	5 1/8	A36	4	
1	rb32	RB 1 1/4	0	3	A36	1	
1	sb63	SB 1/2	2	10	A36	2	
9	sb16	SB 1/2	2	10	A36	22	
8	sb24	SB 1/2	2	9 11/16	A36	19	
ONE	1020HR2	HANDRAIL				94	
1	1020HR2	PIPE 1 1/4 SCH 40	5	0	L.F. A53B	11	
1	hss1265	HSS1 1/2x1 1/2x3/16	4	10 11/16	A500B	18	
1	hss530	HSS1 1/2x1 1/2x3/16	3	2 1/2	A500B	12	
1	hss605	HSS1 1/2x1 1/2x3/16	2	4 3/4	A500B	9	
1	hss1264	HSS1 1/2x1 1/2x3/16	2	4 3/8	A500B	9	
1	rb6	RB 1/2	0	5 1/8	A36	0	
1	rb32	RB 1 1/4	0	3	A36	1	
14	sb16	SB 1/2	2	10	A36	34	

Total weight : 251

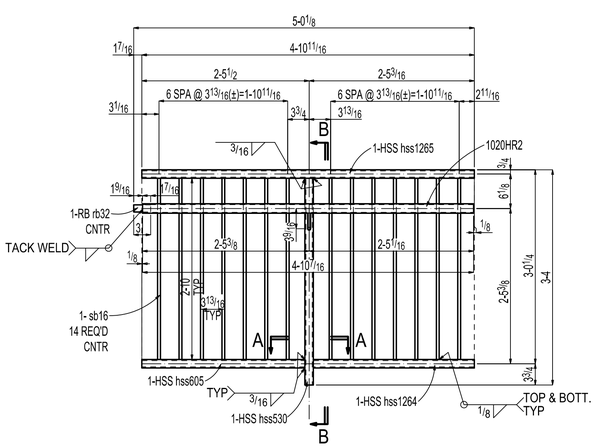

ONE HANDRAIL 1020HR2

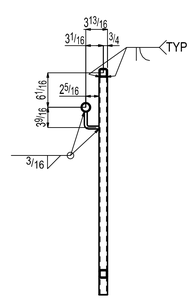

Section B-B
1020HR2

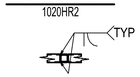

Section A-A
1020HR2

NO	REVISION	BY	DATE
0	FOR FABRICATION	SDL-JAL	12 / 10 / 2024

SCG PROJECT: --- PFG PROJECT: --- STEEL FAB:

CLIENT / PROJECT: PRINCETON HOBSON COLLEGE

PRINCETON, NJ

ITEM # 2 | DWG TITLE: - HANDRAIL DETAIL

HOLES: Ø13/16 UNO | PIPES: A53B

ELECTRODES: 70XXX UNO | TUBES: A500B | SCALE: -- | DRAWING: -

BEAMS: A992 | FINISH: PRIME PAINTED | DWN. BY: | DATE: - 12-10-2024

ANGLE, CHANNELS, PLATES & BARS: A36 | CHK'D. BY: | DATE: - 12-10-2024

1020

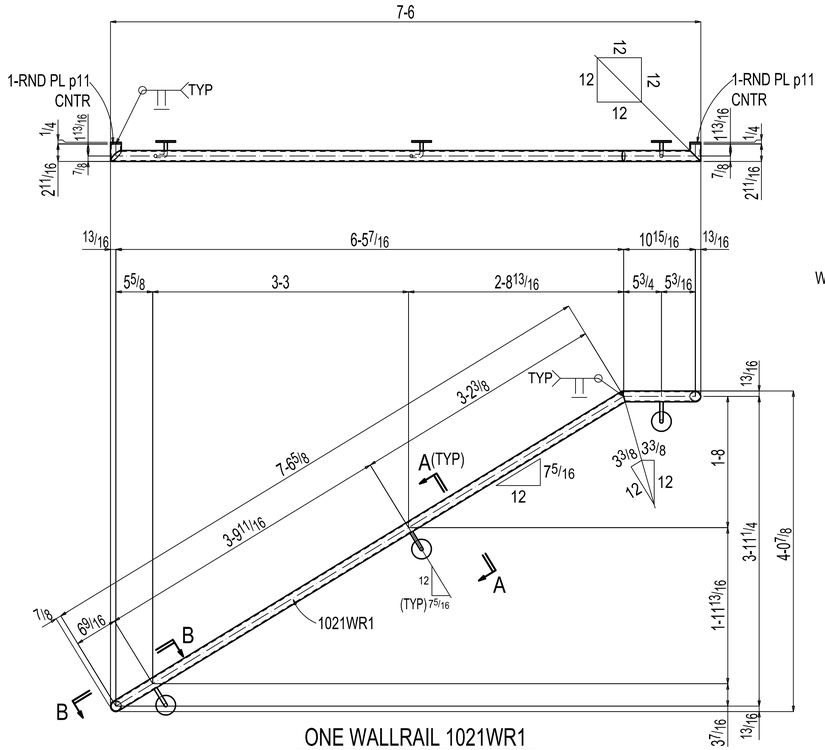

ONE WALLRAIL 1021WR1

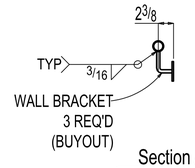

Section A-A
1021WR1

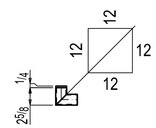

Section B-B
1021WR1

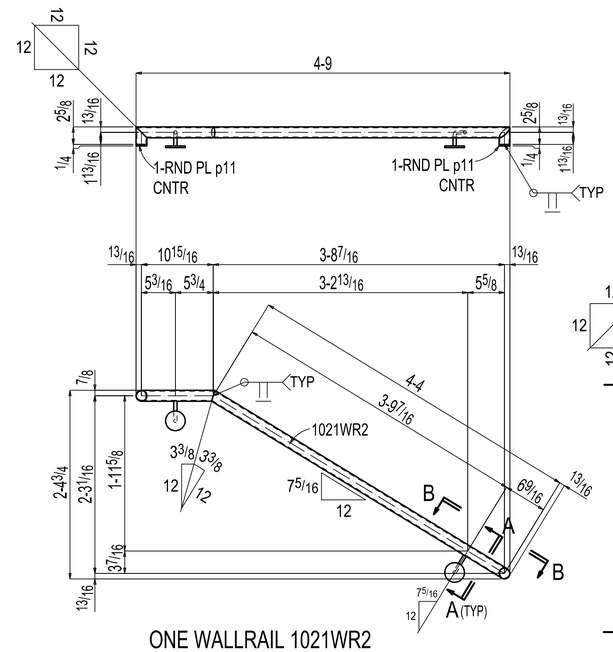

ONE WALLRAIL 1021WR2

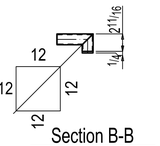

Section B-B
1021WR2

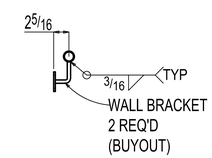

Section A-A
1021WR2

BILL OF MATERIAL

QTY TOTAL	PC MARK	DESCRIPTION	LENGTH		REMARKS	WEIGHT TOTAL	ADVANCE MILL #
ONE	1021WR1	WALLRAIL				46	
2	1021WR1	PIPE 1 1/4 STD	10	0	L.F. A53B	45	
3		WALL BRACKET			(BUYOUT)		
2	p11	RPL 1/4x11 11/16			A36	0	
ONE	1021WR2	WALLRAIL				30	
2	1021WR2	PIPE 1 1/4 STD	6	6	L.F. A53B	30	
2		WALL BRACKET			(BUYOUT)		
2	p11	RPL 1/4x11 11/16			A36	0	
ONE	1021WR3	WALLRAIL				22	
1	1021WR3	PIPE 1 1/4 STD	9	6	L.F. A53B	22	
3		WALL BRACKET			(BUYOUT)		
2	p11	RPL 1/4x11 11/16			A36	0	

Total weight : 97

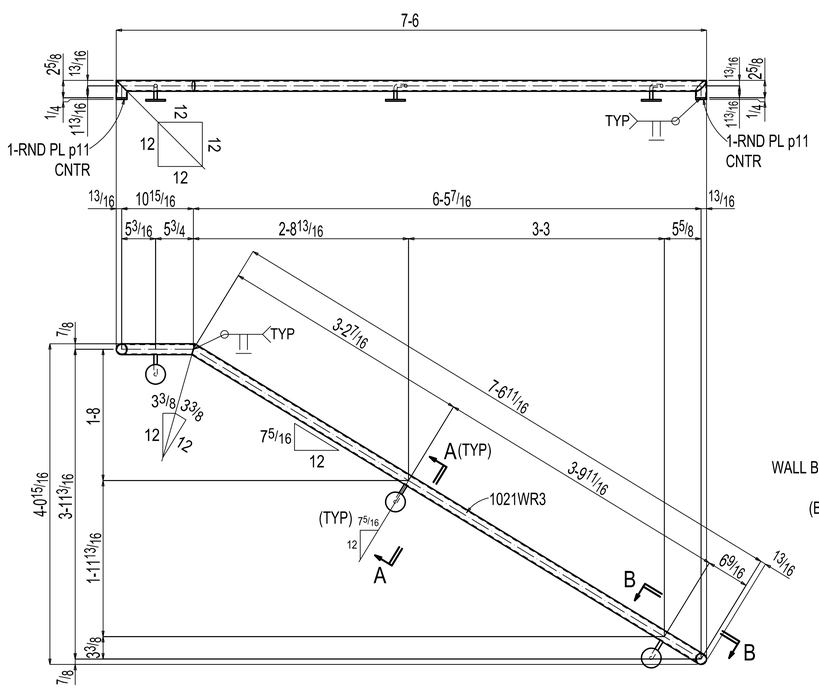

ONE WALLRAIL 1021WR3

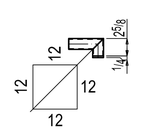

Section B-B
1021WR3

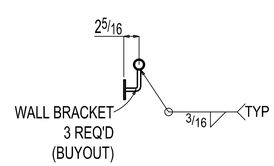

Section A-A
1021WR3

NO	REVISION	BY	DATE
0	FOR FABRICATION	SDL-JAL	12 / 10 / 2024

SCG PROJECT: --- PFG PROJECT: --- STEEL FAB:

CLIENT / PROJECT: PRINCETON HOBSON COLLEGE

PRINCETON, NJ

ITEM # 2 | DWG TITLE: - WALLRAIL DETAIL

HOLES: Ø13/16 UNO | PIPES: A53B

ELECTRODES: 70XXX UNO | TUBES: A500B | SCALE: -- | DRAWING: - 1021

BEAMS: A992 | FINISH: PRIME PAINTED | DWN. BY: | DATE: - 12-10-2024

ANGLE, CHANNELS, PLATES & BARS: A36 | CHK'D. BY: | DATE: - 12-10-2024

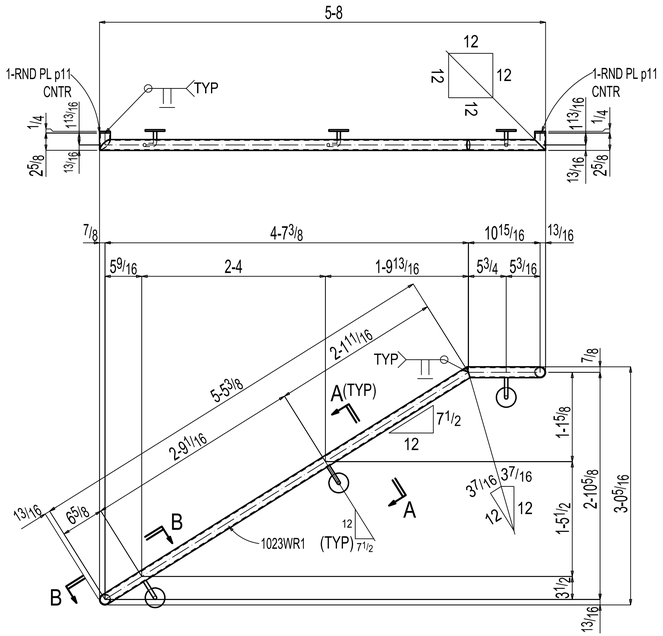

ONE WALLRAIL 1023WR1

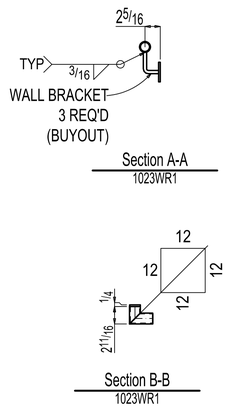

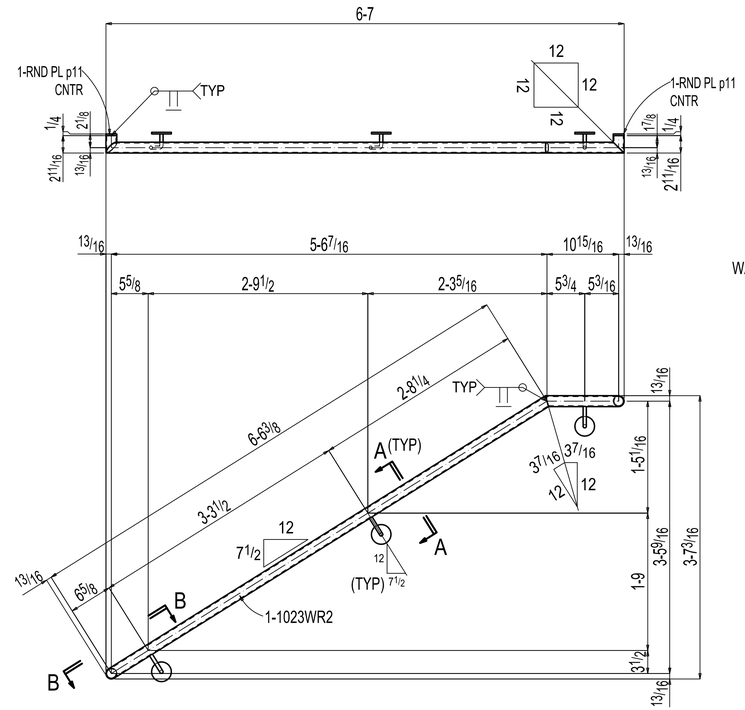

ONE WALLRAIL 1023WR2

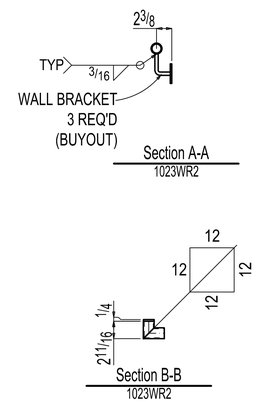

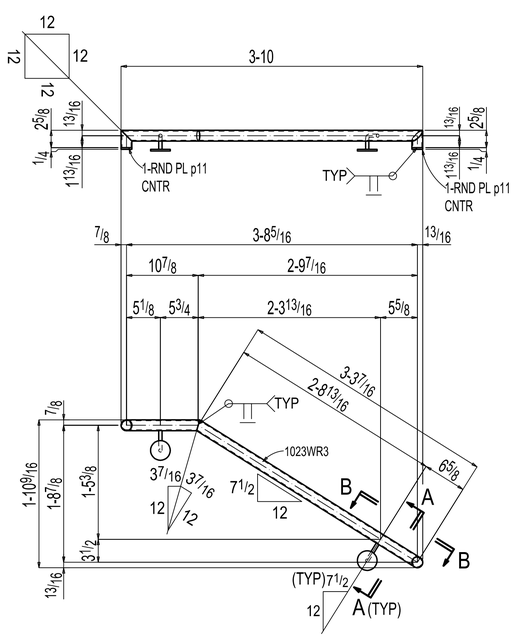

ONE WALLRAIL 1023WR3

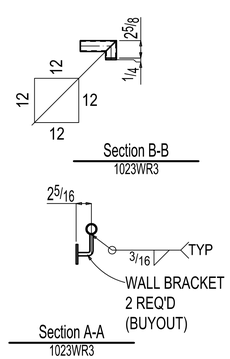

BILL OF MATERIAL

QTY TOTAL	PC MARK	DESCRIPTION	LENGTH		REMARKS	WEIGHT TOTAL	ADVANCE MILL #
ONE	1023WR1	WALLRAIL				17	
1	1023WR1	PIPE 1 1/4 STD	7	6	L.F. A53B	17	
3		WALL BRACKET			(BUYOUT)		
2	p11	RPL 1/4x11 11/16			A36	0	
ONE	1023WR2	WALLRAIL				21	
1	1023WR2	PIPE 1 1/4 STD	9	0	L.F. A53B	20	
3		WALL BRACKET			(BUYOUT)		
2	p11	RPL 1/4x11 11/16			A36	0	
ONE	1023WR3	WALLRAIL				25	
2	1023WR3	PIPE 1 1/4 STD	5	6	L.F. A53B	25	
2		WALL BRACKET			(BUYOUT)		
2	p11	RPL 1/4x11 11/16			A36	0	

Total weight : 63

NO	REVISION	BY	DATE
0	FOR FABRICATION	SDL-JAL	12 / 10 / 2024

SCG PROJECT: --- PFG PROJECT: --- STEEL FAB:

CLIENT / PROJECT: PRINCETON HOBSON COLLEGE

PRINCETON, NJ

ITEM # 2 | DWG TITLE: - WALLRAIL DETAIL

HOLES: Ø 13/16 UNO | PIPES: A53B

ELECTRODES: 70XXX UNO | TUBES: A500B | SCALE: -- | DRAWING: -

BEAMS: A992 | FINISH: PRIME PAINTED | DWN. BY: | DATE: - 12-10-2024

ANGLE, CHANNELS, PLATES & BARS: A36 | CHK'D. BY: | DATE: - 12-10-2024

1023