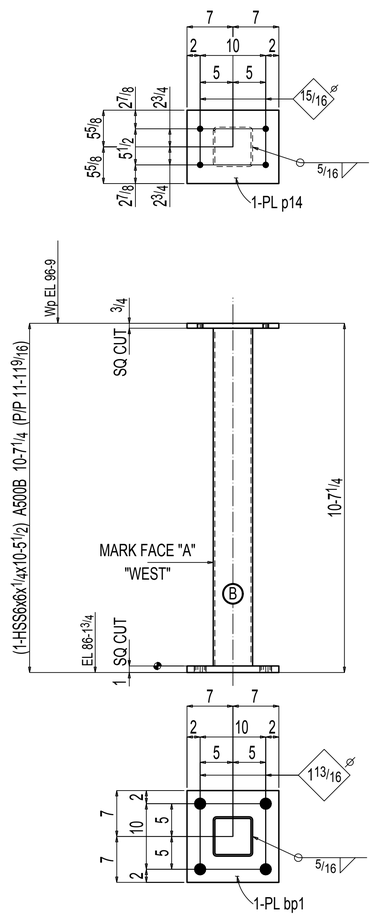

4 COLUMNS 2C1

AT GRID:
K.4 & 22
K.4 & 23
F & 22
F & 23

FIELD VERIFY LENGTH PRIOR TO FABRICATION.

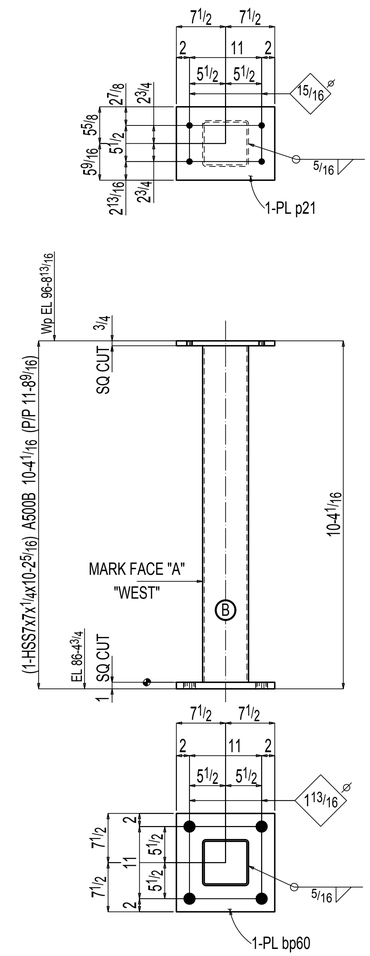

2 COLUMNS 2C2

AT GRID:
J.5 & 22
J.5 & 23

FIELD VERIFY LENGTH PRIOR TO FABRICATION.

BILL OF MATERIAL

MARK	QTY	DESCRIPTION	FT	IN	REMARKS
2C1	4	COLUMN			
2C1	4	HSS6x6x1/4	10	5 1/2	S2E A500B
bp1	4	PL1x14	1	2	A572-50
p14	4	PL3/4x11 13/16	1	2	A572-50
2C2	2	COLUMN			
2C2	2	HSS7x7x1/4	10	2 5/16	S2E A500B
bp60	2	PL1x15	1	3	A572-50
p21	2	PL3/4x11 13/16	1	3	A572-50
	2				

SHOP NOTE:
SURFACE PREP:SSPC-SP2

HOLES: 13/16 DIA U.N.O. FINISH: STD SHOP PRIMER

REV	DATE	DESCRIPTION	BY
0			
A			

CLIENT:
ARCH & ENGR:
JOB NAME:
LOCATION:
DETAIL OF:
DATE: DRAWN BY:
CHECKED BY: JOB #
DWG. # 2 0

BILL OF MATERIAL

NO.	SECTION	FIT.	IN.	TEMP MARK	SHIPPING MARK	WEIGHT UNIT	WEIGHT TOTAL	REMARKS
ONE	COLUMN				2C1	166	166	
1	HSS4x4x1/4	12	7 3/4	2C1		154	154	S1E A500B
1	PL3/8x3 1/2	1	0	p72		4	4	A36
1	PL3/8x3 1/2	0	9	p74		3	3	A36
1	PL3/8x3 1/2	0	6	p80		2	2	A36
1	PL1/4x4	0	4	cp1		1	1	A36
ONE	COLUMN				2C2	171	171	
1	HSS4x4x1/4	12	7 1/2	2C2		154	154	S1E A500B
1	PL1/2x5 1/2	0	7 1/2	p122		6	6	A36
1	PL3/8x6	0	6	p120		4	4	A36
2	PL3/8x3 1/2	0	9	p74		3	7	A36
	FIELD BOLTS							
2	1/2 Dia A307	0	2 1/2					

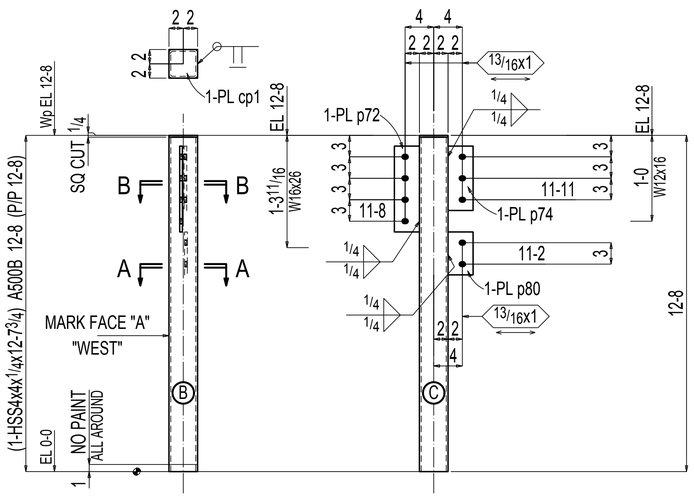

ONE COLUMN 2C1

AT GRID:
7 & F

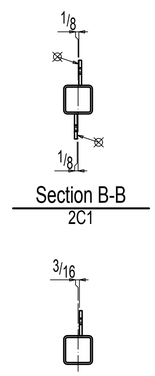

Section B-B
2C1

Section A-A
2C1

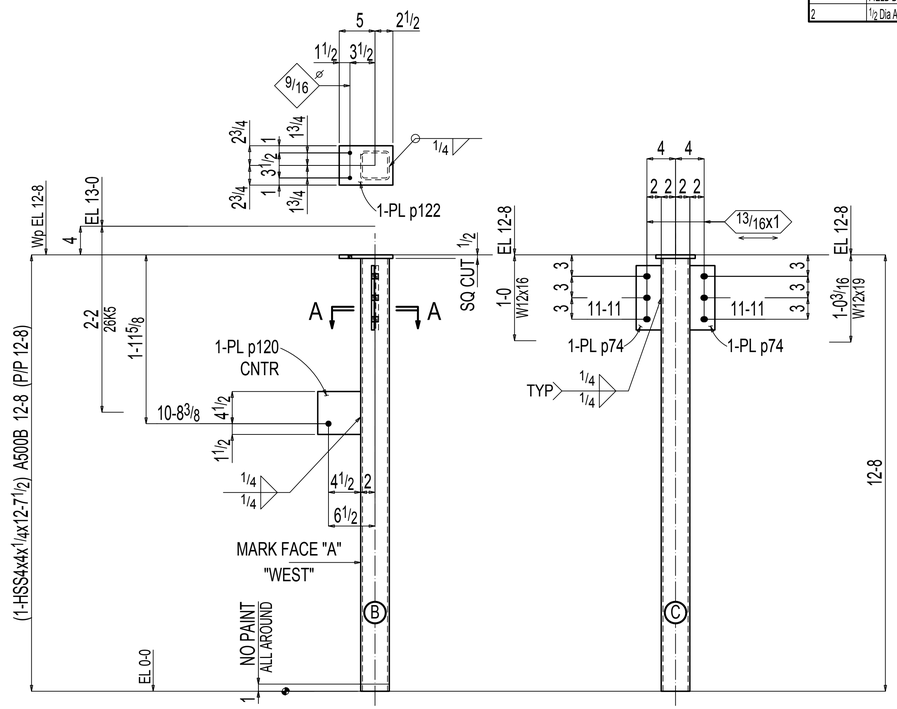

ONE COLUMN 2C2

AT GRID:
6 & F

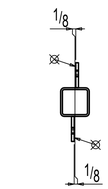

Section A-A
2C2

TOTAL WEIGHT THIS DRAWINGS:334

PAINT: 1-S/C PRIMER
OPEN HOLES: 13/16" DIA (UNO) OPEN SLTS: 13/16x1 DIA (UNO) BOLT: 3/4" DIA A325(UNO) EDGE DIST: 1 1/2"(UNO)

MATERIAL	
WIDE FLANGE	A992 (UNO)
PIPE	A53B (UNO)
TUBE	A500B (UNO)
CHANNEL	A36 (UNO)
PLATE,ANGLE,BAR	A36 (UNO)

THESE SHOP AND ERECTION DRAWINGS ARE AND SHALL REMAIN THE PROPERTY OF MODERN MACHINE SHOP, INC. THESE SHALL NOT BE USED, REPRODUCED, MODIFIED, OR COPIED IN ANY FORM OR MANNER WITHOUT THE EXPRESS, WRITTEN PERMISSION, CONSENT, AND DUE COMPENSATION TO THE FABRICATOR:
MODERN MACHINE SHOP, INC., COPYRIGHT 2013

NOTICE TO CONTRACTORS AND/OR ERECTORS

MODERN MACHINE SHOP, INC. WILL NOT ACCEPT BACKCHARGERS FOR CORRECTIVE WORK OR REPLACED MATERIALS UNLESS AUTHORIZED AND APPROVED. FAILURE TO COMPLY WITH THIS REQUIREMENT WILL BECOME CONTRACTORS/ERECTORS LIABILITY. ANY QUESTIONS CALL (955) 722-4656

DATE: _____ SIGNATURE: _____

REF:E8 THRU E20

ALL RUNNING DIMENSIONS FROM END OF MAIN MATERIAL.
ALL VERTICAL SPACING OF HOLES TO BE 3"UNLESS NOTED.
ALL SNIPS TO BE 3/4 X 3/4 UNLESS NOTED.
ALL COPES TO BE RADIUSED.
⊗ DENOTES "CONTACT SURFACE"THIS SIDE OF PLATE.
HOLES IN END PLATES AND OUTSTANDING LEGS OF END CLIPS
X INDICATES LAYOUT MARK FOR FABRICATION.
LD=LIW,DTI HD=FLT WASHER FL=WROUGHT WASHER
MEMBERS ARE TO BE ERECTED SO THAT MARKED END IS IN SAME LOCATION AS ON ERECTION DRAWING NO.

NO.	DATE	BY	DESCRIPTION

REV.

CUSTOMER:
ARCHITECT:
PROJECT:
LOCATION:

DRWN ____ DATE ____ FOR APPL. ____ ORDER NO. ____
CHKD ____ DATE ____ TO SHOP ____ REV. 0 DWG. 2

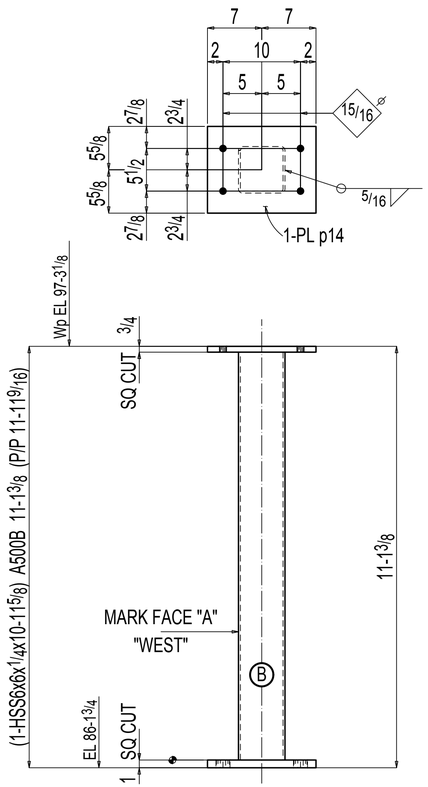

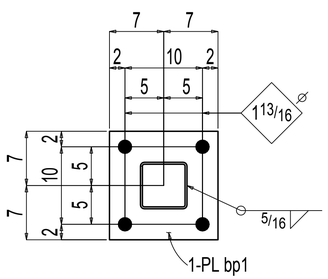

ONE COLUMN 3C1

AT GRID:
H.5 & 24

FIELD VERIFY LENGTH PRIOR TO FABRICATION.

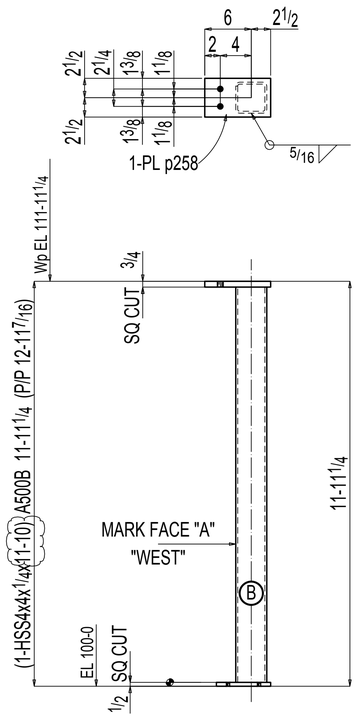

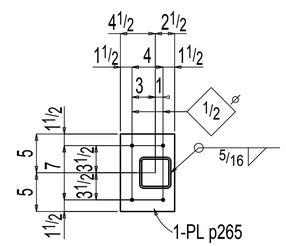

ONE COLUMN 3C2

AT GRID:
J.5 & 23

ISSUED FOR RE-APPROVAL. C

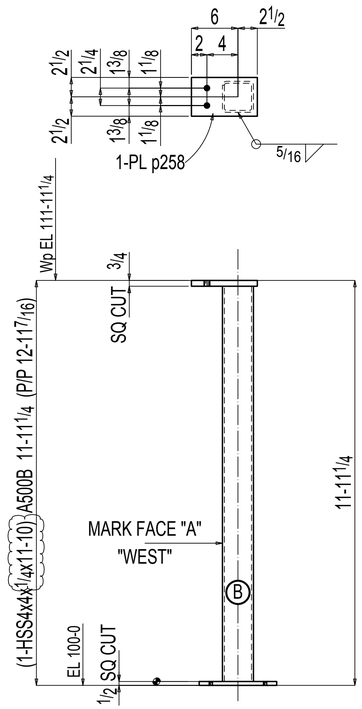

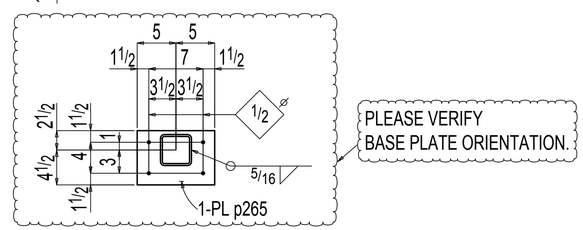

ONE COLUMN 3C3

AT GRID:
K.4 & 24

ISSUED FOR RE-APPROVAL. C

PLEASE VERIFY / PROVIDE ALL CLOUDED ITEMS.

BILL OF MATERIAL

MARK	QTY	DESCRIPTION	FT	IN	REMARKS
3C1	ONE	COLUMN			
3C1	1	HSS6x6x1/4	10	11 5/8	S2E A500B
bp1	1	PL1x14	1	2	A572-50
p14	1	PL3/4x11 13/16	1	2	A572-50
		FIELD BOLTS			
	4	7/8 Dia A325N	0	2 3/4	+1HD WASH
3C2	ONE	COLUMN			
3C2	1	HSS4x4x1/4	11	10	S1E A500B
p258	1	PL3/4x5	0	8 1/2	A572-50
p265	1	PL1/2x7	0	10	A572-50
		FIELD BOLTS			
	4	3/8 Dia EXP ANC	0	3	
3C3	ONE	COLUMN			
3C3	1	HSS4x4x1/4	11	10	S1E A500B
p258	1	PL3/4x5	0	8 1/2	A572-50
p265	1	PL1/2x7	0	10	A572-50
		FIELD BOLTS			
	4	3/8 Dia EXP ANC	0	3	

C

SHOP NOTE:
SURFACE PREP:SSPC-SP2

HOLES: 13/16 DIA U.N.O. FINISH: STD SHOP PRIMER

REV	DATE	DESCRIPTION	BY
C			
B			
0			
A			

CLIENT:
ARCH & ENGR:
JOB NAME:
LOCATION:
DETAIL OF:
DATE: DRAWN BY:
CHECKED BY: MJB JOB #
DWG. # 3 C

BILL OF MATERIAL

NO.	SECTION	FIT.	IN.	TEMP MARK	SHIPPING MARK	WEIGHT UNIT	WEIGHT TOTAL	REMARKS
ONE	COLUMN				3C1	171	171	
1	HSS4x4x1/4	13	0 1/8	3C1		159	159	B1E A500B
1	PL3/8x3 1/2	1	0	p72		4	4	A36
2	PL3/8x3 1/2	0	9	p74		3	7	A36
1	PL1/4x4	0	4	cp1		1	1	A36
2	COLUMN				3C2	164	329	
2	HSS4x4x1/4	12	7 3/4	3C2		154	309	S1E A500B
4	PL3/8x3 1/2	1	0	p72		4	18	A36
2	PL1/4x4	0	4	cp1		1	2	A36

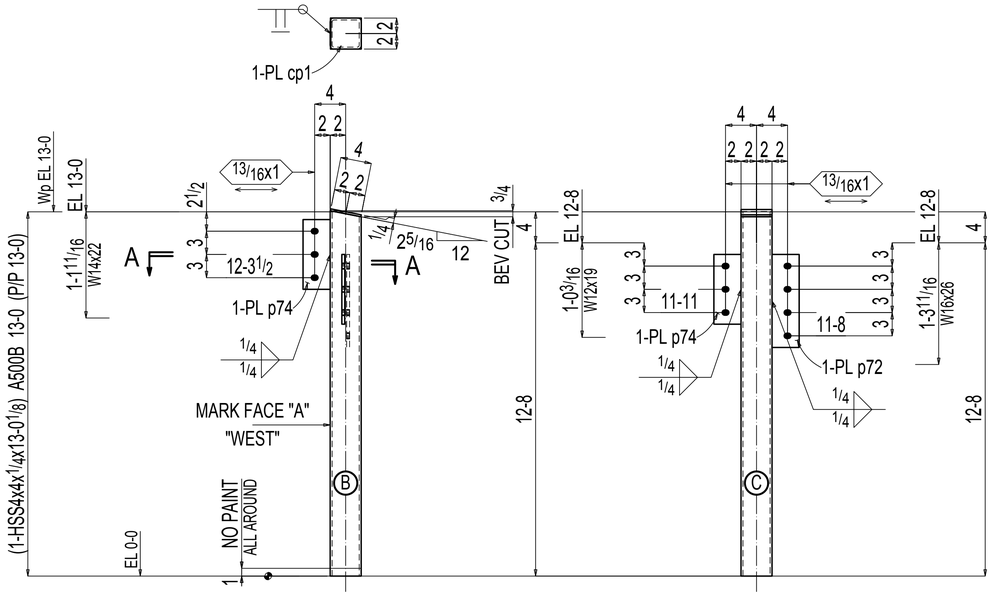

ONE COLUMN 3C1

AT GRID:
5 & F

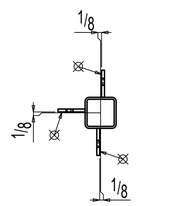

Section A-A
3C1

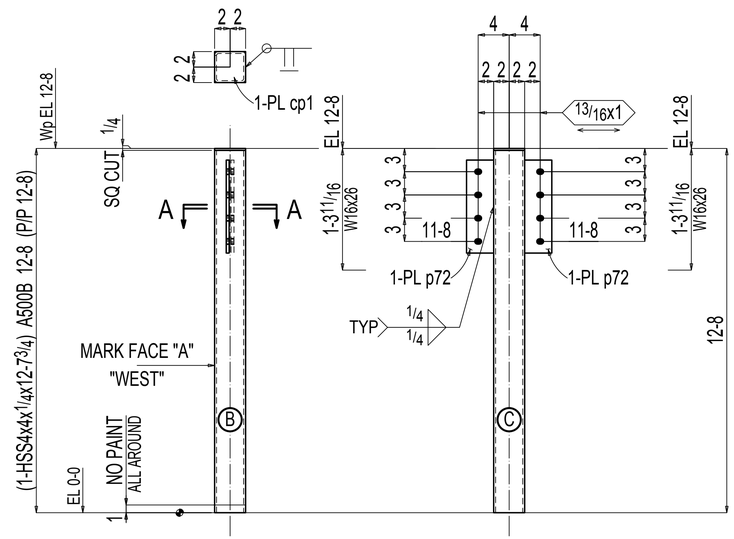

2 COLUMNS 3C2

AT GRID:
4 & F
3 & F

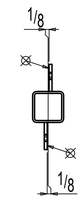

Section A-A
3C2

TOTAL WEIGHT THIS DRAWINGS:500

PAINT: 1-S/C PRIMER
OPEN HOLES: 13/16x1" DIA (UNO) OPEN SLOTS: 13/16x1 DIA (UNO) BOLT: 3/4" DIA A325(UNO) EDGE DIST. 1 1/2"(UNO)

MATERIAL	
WIDE FLANGE	A992 (UNO)
PIPE	A53B (UNO)
TUBE	A500B (UNO)
CHANNEL	A36 (UNO)
PLATE,ANGLE,BAR	A36 (UNO)

REF:E8 THRU E20

ALL RUNNING DIMENSIONS FROM END OF MAIN MATERIAL
ALL VERTICAL SPACING OF HOLES TO BE 3"UNLESS NOTED.
ALL SNIPS TO BE 3/4 X 3/4 UNLESS NOTED.
ALL COPES TO BE RADIUSED.
⊗ DENOTES "CONTACT SURFACE"THIS SIDE OF PLATE.
HOLES IN END PLATES AND OUTSTANDING LEGS OF END CLIPS
X INDICATES LAYOUT MARK FOR FABRICATION
LD=LW,DTI HD=FLT WASHER FL=WROUGHT WASHER
MEMBERS ARE TO BE ERECTED SO THAT MARKED END IS
IN SAME LOCATION AS ON ERECTION DRAWING NO.

THESE SHOP AND ERECTION DRAWINGS ARE AND SHALL REMAIN THE PROPERTY OF MODERN MACHINE SHOP, INC. THESE SHALL NOT BE USED, REPRODUCED, MODIFIED, OR COPIED IN ANY FORM OR MANNER WITHOUT THE EXPRESS, WRITTEN PERMISSION, CONSENT, AND DUE COMPENSATION TO THE FABRICATOR:
MODERN MACHINE SHOP, INC., COPYRIGHT 2013

NOTICE TO CONTRACTORS AND/OR ERECTORS

MODERN MACHINE SHOP, INC. WILL NOT ACCEPT BACKCHARGERS FOR CORRECTIVE WORK OR REPLACED MATERIALS UNLESS AUTHORIZED AND APPROVED. FAILURE TO COMPLY WITH THIS REQUIREMENT WILL BECOME CONTRACTORS/ERECTORS LIABILITY. ANY QUESTIONS CALL (956) 722-4656

DATE: _____ SIGNATURE: _____

NO.	DATE	BY	DESCRIPTION

REV.

CUSTOMER:
ARCHITECT:
PROJECT:
LOCATION:

DRWN _____ DATE _____ FOR APPL. _____
CHKD _____ DATE _____ TO SHOP _____

ORDER NO. _____
REV. 0 DWG. 3

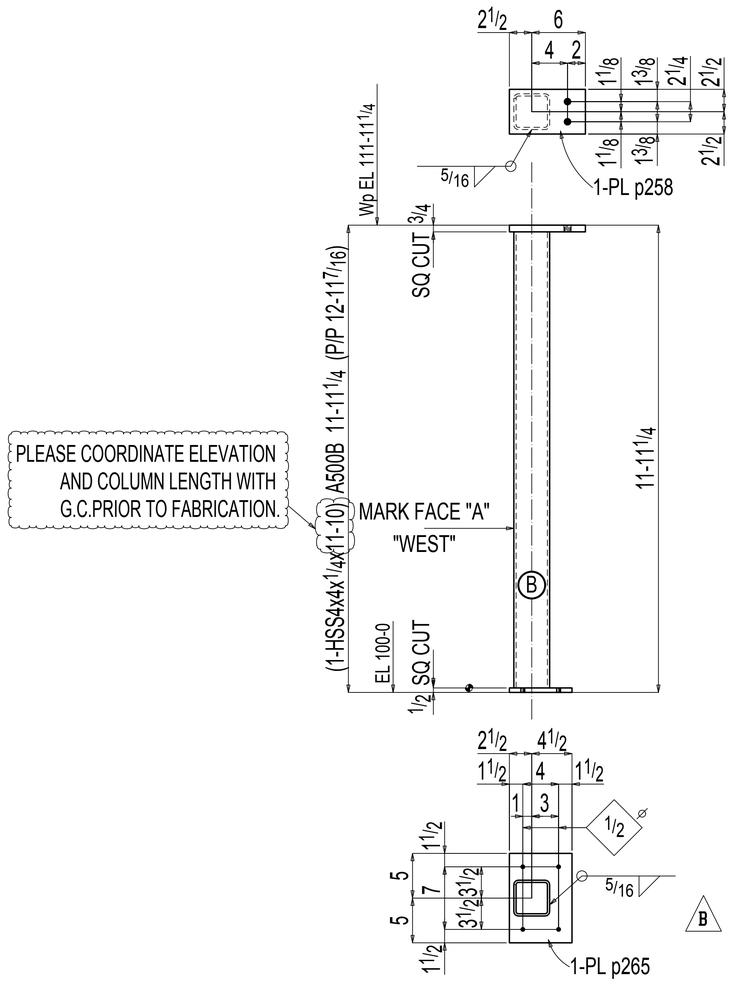

2 COLUMNS 4C1

AT GRID:
K.4 & 23
J.5 & 22.5

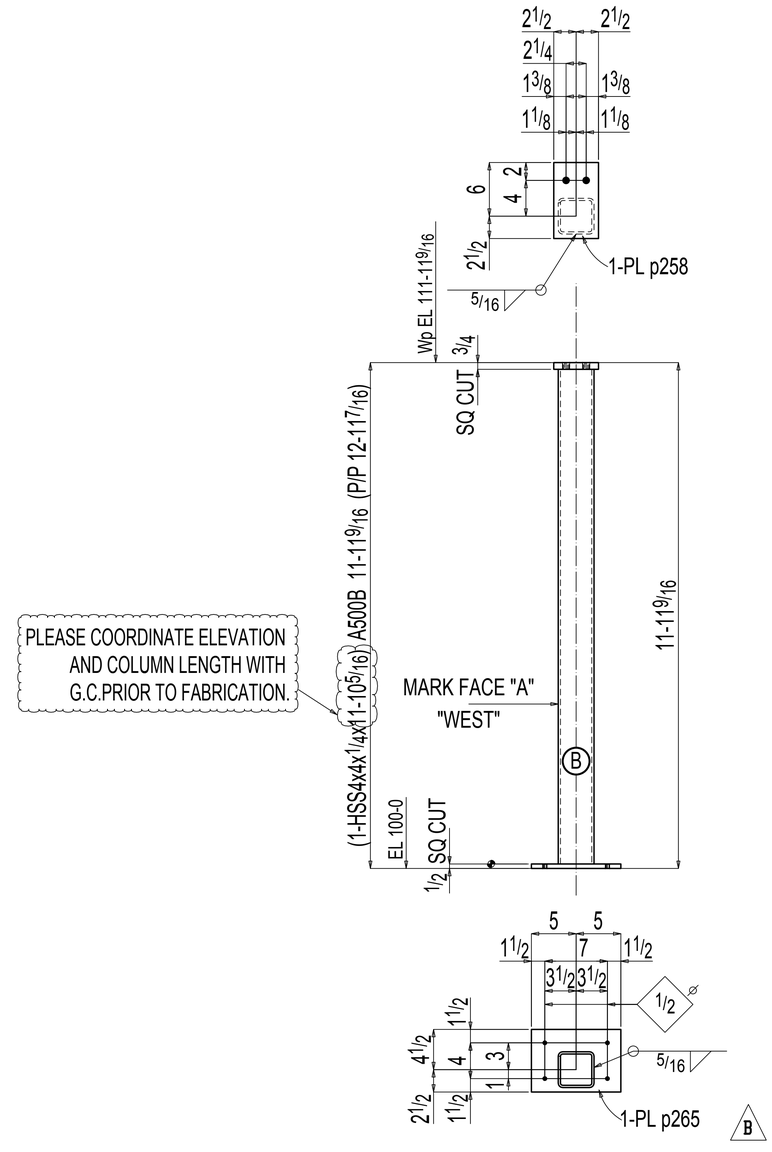

2 COLUMNS 4C2

AT GRID:
K.4 & 22
K.4 & 23

PLEASE VERIFY / PROVIDE ALL CLOUDED ITEMS.

BILL OF MATERIAL

MARK	QTY	DESCRIPTION	FT	IN	REMARKS
4C1	2	COLUMN			
4C1	2	HSS4x4x1/4	11	10	S2E A500B
p258	2	PL3/4x5	0	8 1/2	A572-50
B p265	2	PL1/2x7	0	10	A572-50
		FIELD BOLTS			
	8	3/8 Dia EXP ANC	0	3	
4C2	2	COLUMN			
4C2	2	HSS4x4x1/4	11	10 5/16	S1E A500B
p258	2	PL3/4x5	0	8 1/2	A572-50
B p265	2	PL1/2x7	0	10	A572-50
		FIELD BOLTS			
	8	3/8 Dia EXP ANC	0	3	

SHOP NOTE:
SURFACE PREP:SSPC-SP2

HOLES: 13/16 DIA U.N.O. FINISH: STD SHOP PRIMER

REV	DATE	DESCRIPTION	BY
C			
B			
A			

CLIENT:
ARCH & ENGR:
JOB NAME:
LOCATION:
DETAIL OF:
DATE: DRAWN BY:
CHECKED BY: JOB #
DWG. # 4 C

BILL OF MATERIAL

NO.	SECTION	FIT.	IN.	TEMP MARK	SHIPPING MARK	WEIGHT UNIT	WEIGHT TOTAL	REMARKS
ONE	COLUMN				4C1	172	172	
1	HSS4x4x1/4	13	01/8	4C1		159	159	B1E A500B
2	PL3/8x31/2	1	0	p72		4	9	A36
1	PL3/8x31/2	0	9	p74		3	3	A36
1	PL1/4x4	0	4	cp1		1	1	A36
ONE	COLUMN				4C2	168	168	
1	HSS4x4x1/4	13	01/8	4C2		159	159	B1E A500B
1	PL3/8x31/2	1	0	p72		4	4	A36
1	PL3/8x31/2	0	9	p74		3	3	A36
1	PL1/4x4	0	4	cp1		1	1	A36

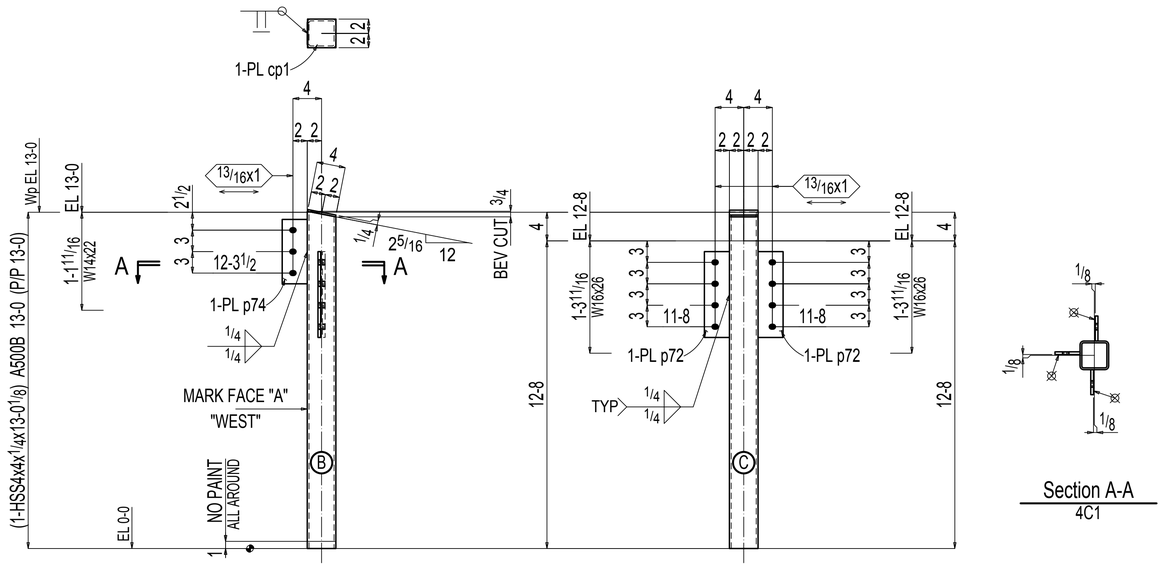

ONE COLUMN 4C1

AT GRID:
2 & F

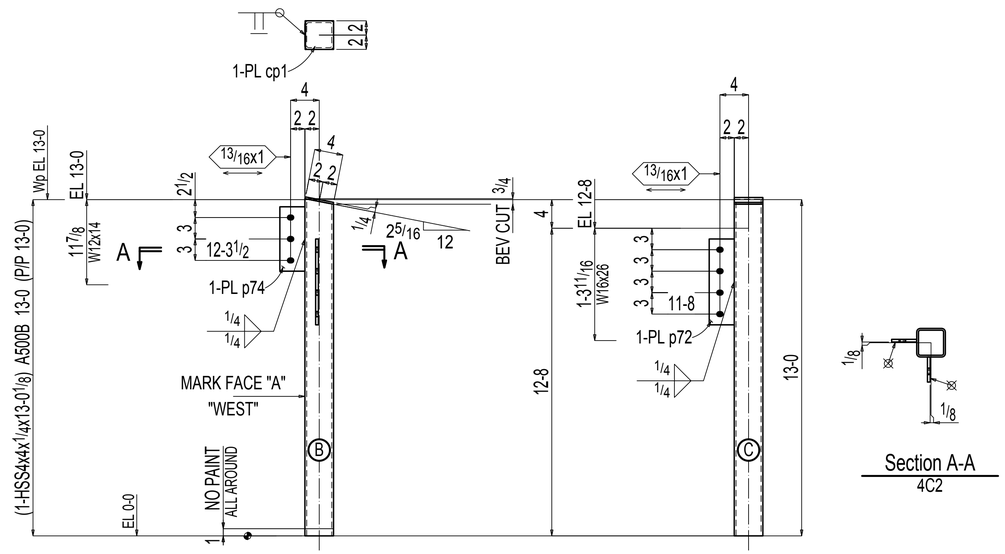

ONE COLUMN 4C2

AT GRID:
1 & F

TOTAL WEIGHT THIS DRAWINGS:340

PAINT: 1-S/C PRIMER
OPEN HOLES: 13/16" DIA (UNO) OPEN SLOTS: 13/16x1 DIA (UNO) BOLT: 3/4" DIA A325(UNO) EDGE DIST: 1 1/2"(UNO)

MATERIAL	
WIDE FLANGE	A992 (UNO)
PIPE	A53B (UNO)
TUBE	A500B (UNO)
CHANNEL	A36 (UNO)
PLATE,ANGLE,BAR	A36 (UNO)

THESE SHOP AND ERECTION DRAWINGS ARE AND SHALL REMAIN THE PROPERTY OF MODERN MACHINE SHOP, INC. THESE SHALL NOT BE USED, REPRODUCED, MODIFIED, OR COPIED IN ANY FORM OR MANNER WITHOUT THE EXPRESS, WRITTEN PERMISSION, CONSENT, AND DUE COMPENSATION TO THE FABRICATOR:
MODERN MACHINE SHOP, INC., COPYRIGHT 2013

NOTICE TO CONTRACTORS AND/OR ERECTORS

MODERN MACHINE SHOP, INC. WILL NOT ACCEPT BACKCHARGERS FOR CORRECTIVE WORK OR REPLACED MATERIALS UNLESS AUTHORIZED AND APPROVED. FAILURE TO COMPLY WITH THIS REQUIREMENT WILL BECOME CONTRACTORS/ERECTORS LIABILITY. ANY QUESTIONS CALL (956) 722-4556

DATE: _____ SIGNATURE: _____

REF:E8 THRU E20

ALL RUNNING DIMENSIONS FROM END OF MAIN MATERIAL.
ALL VERTICAL SPACING OF HOLES TO BE 3"UNLESS NOTED.
ALL SNIPS TO BE 3/4 X 3/4 UNLESS NOTED.
ALL COPES TO BE RADIUSED.
⊗ DENOTES "CONTACT SURFACE"THIS SIDE OF PLATE.
HOLES IN END PLATES AND OUTSTANDING LEGS OF END CLIPS
X INDICATES LAYOUT MARK FOR FABRICATION
LD=LW DTI HD=FLT WASHER FL=WROUGHT WASHER
MEMBERS ARE TO BE ERECTED SO THAT MARKED END IS IN SAME LOCATION AS ON ERECTION DRAWING NO.

NO.	DATE	BY	DESCRIPTION

REV.

CUSTOMER: _____
ARCHITECT: _____
PROJECT: _____
LOCATION: _____

DRWN _____ DATE _____ FOR APPL. _____ ORDER NO. _____
CHKD _____ DATE _____ TO SHOP _____ REV. 0 DWG. 4

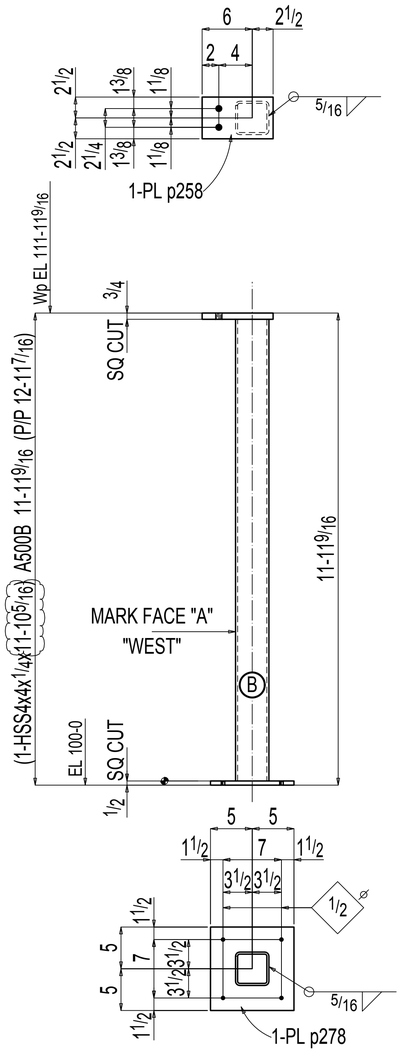

ONE COLUMN 5C1

AT GRID:
K & 22.5

BILL OF MATERIAL

MARK	QTY	DESCRIPTION	FT	IN	REMARKS
5C1	ONE	COLUMN			
5C1	1	HSS4x4x1/4	11	10 5/16	S2E A500B
p258	1	PL3/4x5	0	8 1/2	A572-50
p278	1	PL1/2x10	0	10	A572-50
		FIELD BOLTS			
	7	3/8 Dia EXP ANC	0	3	

C

SHOP NOTE:
SURFACE PREP:SSPC-SP2

HOLES: 13/16 DIA U.N.O. FINISH: STD SHOP PRIMER

REV	DATE	DESCRIPTION	BY
C			
B			
A			

CLIENT:

ARCH & ENGR:

JOB NAME:

LOCATION:

DETAIL OF:

DATE: DRAWN BY:

CHECKED BY: JOB #

DWG. # 5 C

PLEASE VERIFY / PROVIDE ALL CLOUDED ITEMS.

BILL OF MATERIAL

NO.	SECTION	FIT.	IN.	TEMP MARK	SHIPPING MARK	WEIGHT UNIT	WEIGHT TOTAL	REMARKS
ONE	COLUMN				5C1	319	319	
1	HSS5x5x1/4	19	7 3/16	5C1		306	306	S1E A500B
1	PL3/8x3 1/2	1	0	p72		4	4	A36
2	PL3/8x3 1/2	0	9	p74		3	7	A36
1	PL1/4x5	0	5	cp3		2	2	A36
ONE	COLUMN				5C2	172	172	
1	HSS4x4x1/4	13	4 1/8	5C2		163	163	B1E A500B
1	PL3/8x3 1/2	1	0	p72		4	4	A36
1	PL3/8x3 1/2	0	9	p74		3	3	A36
1	PL1/4x4	0	4	cp1		1	1	A36

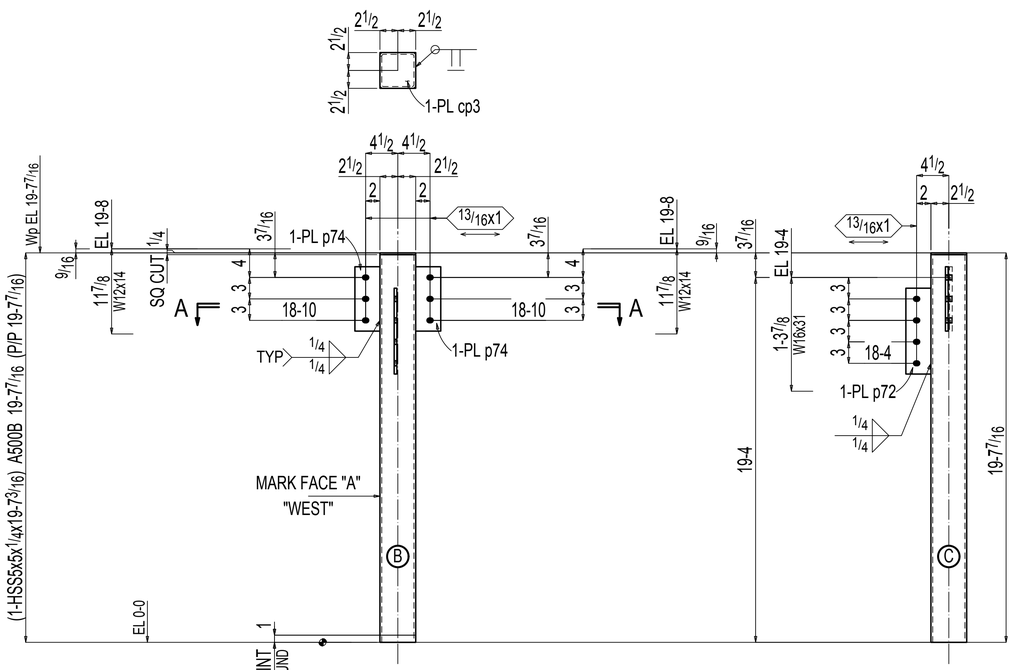

ONE COLUMN 5C1

AT GRID:
1 & E

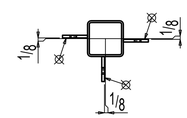

Section A-A
5C1

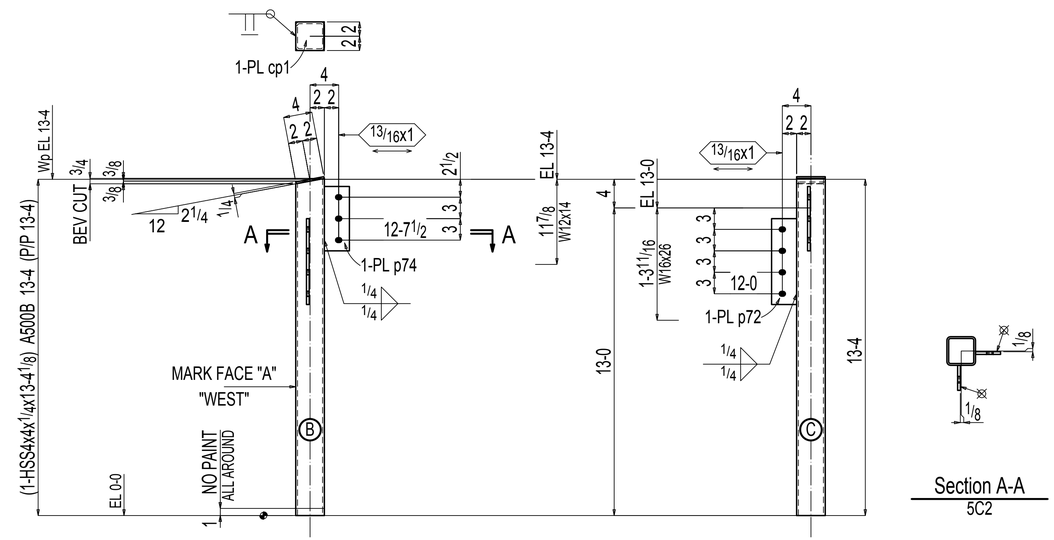

ONE COLUMN 5C2

AT GRID:
1 & A-NEW

Section A-A
5C2

TOTAL WEIGHT THIS DRAWINGS:491

PAINT: 1-S/C PRIMER
OPEN HOLES: 13/16" DIA (UNO) OPEN SLOTS: 13/16x1 DIA (UNO) BOLT: 3/4" DIA A325(UNO) EDGE DIST. 1 1/2"(UNO)

MATERIAL	
WIDE FLANGE	A992 (UNO)
PIPE	A53B (UNO)
TUBE	A500B (UNO)
CHANNEL	A36 (UNO)
PLATE,ANGLE,BAR	A36 (UNO)

REF:E8 THRU E20

ALL RUNNING DIMENSIONS FROM END OF MAIN MATERIAL.
ALL VERTICAL SPACING OF HOLES TO BE 3"UNLESS NOTED.
ALL SNIPS TO BE 3/4 X 3/4 UNLESS NOTED.
ALL COPES TO BE RADIUSED.
⊗ DENOTES "CONTACT SURFACE"THIS SIDE OF PLATE.
HOLES IN END PLATES AND OUTSTANDING LEGS OF END CLIPS
X INDICATES LAYOUT MARK FOR FABRICATION
LD=LIW,DTI HD=FLT WASHER FL=WROUGHT WASHER
MEMBERS ARE TO BE ERECTED SO THAT MARKED END IS IN SAME LOCATION AS ON ERECTION DRAWING NO.

NO.	DATE	BY	DESCRIPTION

REV.

THESE SHOP AND ERECTION DRAWINGS ARE AND SHALL REMAIN THE PROPERTY OF MODERN MACHINE SHOP, INC. THESE SHALL NOT BE USED, REPRODUCED, MODIFIED, OR COPIED IN ANY FORM OR MANNER WITHOUT THE EXPRESS, WRITTEN PERMISSION, CONSENT, AND DUE COMPENSATION TO THE FABRICATOR:
MODERN MACHINE SHOP, INC., COPYRIGHT 2013

NOTICE TO CONTRACTORS AND/OR ERECTORS

MODERN MACHINE SHOP, INC. WILL NOT ACCEPT BACKCHARGERS FOR CORRECTIVE WORK OR REPLACED MATERIALS UNLESS AUTHORIZED AND APPROVED. FAILURE TO COMPLY WITH THIS REQUIREMENT WILL BECOME CONTRACTORS/ERECTORS LIABILITY. ANY QUESTIONS CALL (956) 722-4656

DATE: _____ SIGNATURE: _____

CUSTOMER:
ARCHITECT:
PROJECT:
LOCATION:

DRWN	DATE	FOR APPL.	ORDER NO.
CHKD	DATE	TO SHOP	REV. 0 DWG. 5

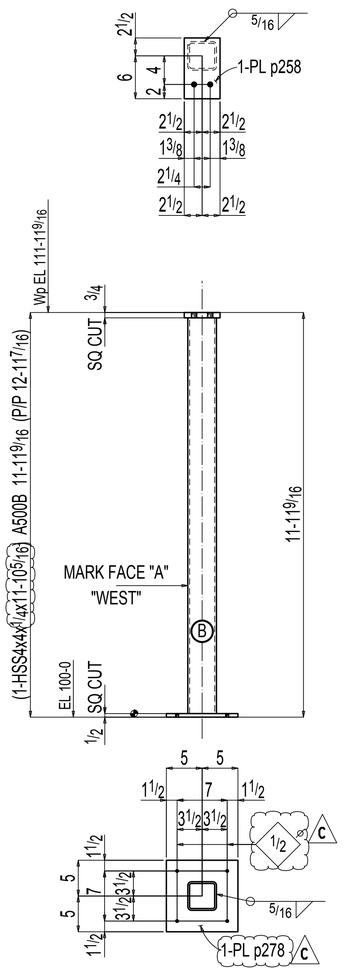

ONE COLUMN 6C1

AT GRID:
J.5 & 22

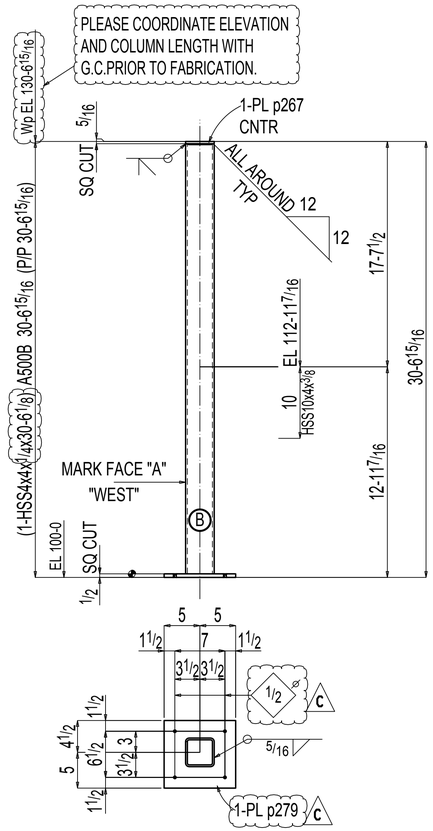

2 COLUMNS 6C2

AT GRID:
F.8 & 22
F.8 & 23

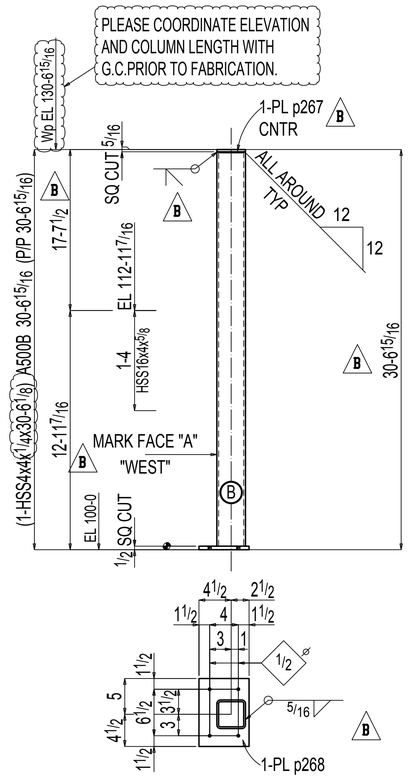

B ONE COLUMN 6C3

AT GRID:
F.8 & 23

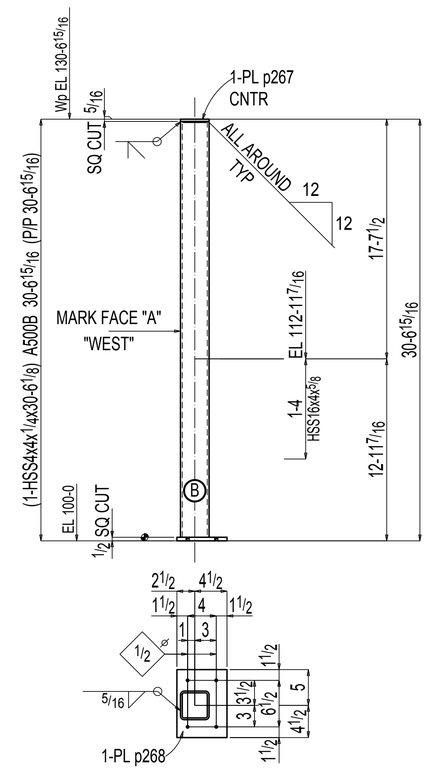

ONE COLUMN 6C4 B

AT GRID:
F.8 & 22

BILL OF MATERIAL

	MARK	QTY	DESCRIPTION	FT	IN	REMARKS
	6C1	ONE	COLUMN			
	6C1	1	HSS4x4x1/4	11	10 5/16	S2E A500B
C	p258	1	PL3/4x5	0	8 1/2	A572-50
	p278	1	PL1/2x10	0	10	A572-50
			FIELD BOLTS			
		4	3/8 Dia EXP ANC	0	3	
B	6C2	2	COLUMN			
	6C2	2	HSS4x4x1/4	30	6 1/8	S1E A500B
	p279	2	PL1/2x9 7/16	0	10	A572-42
	p267	2	PL5/16x4	0	4	A572-50
			FIELD BOLTS			
		8	3/8 Dia EXP ANC	0	3	
	6C3	ONE	COLUMN			
	6C3	1	HSS4x4x1/4	30	6 1/8	S1E A500B
B	p268	1	PL1/2x7	0	9 1/2	A572-50
	p267	1	PL5/16x4	0	4	A572-50
			FIELD BOLTS			
		4	3/8 Dia EXP ANC	0	3	
	6C4	ONE	COLUMN			
	6C4	1	HSS4x4x1/4	30	6 1/8	S2E A500B
	p268	1	PL1/2x7	0	9 1/2	A572-50
B	p267	1	PL5/16x4	0	4	A572-50
			FIELD BOLTS			
		4	3/8 Dia EXP ANC	0	3	

SHOP NOTE:
SURFACE PREP:SSPC-SP2

HOLES: 13/16 DIA U.N.O. FINISH: STD SHOP PRIMER

REV	DATE	DESCRIPTION	BY
C			
B			
A			

CLIENT:
ARCH & ENGR:
JOB NAME:
LOCATION:
DETAIL OF:
DATE: DRAWN BY:
CHECKED BY: JOB #
DWG. # 6 C

PLEASE VERIFY / PROVIDE ALL CLOUDED ITEMS.

BILL OF MATERIAL

NO.	SECTION	FIT.	IN.	TEMP MARK	SHIPPING MARK	WEIGHT UNIT	WEIGHT TOTAL	REMARKS
ONE	COLUMN				6C1	176	176	
1	HSS4x4x1/4	13	4 1/8	6C1		163	163	B1E A500B
2	PL3/8x3 1/2	1	0	p72		4	9	A36
1	PL3/8x3 1/2	0	9	p74		3	3	A36
1	PL1/4x4	0	4	cp1		1	1	A36
2	COLUMN				6C2	169	337	
2	HSS4x4x1/4	12	11 3/4	6C2		158	317	S1E A500B
4	PL3/8x3 1/2	1	0	p72		4	18	A36
2	PL1/4x4	0	4	cp1		1	2	A36

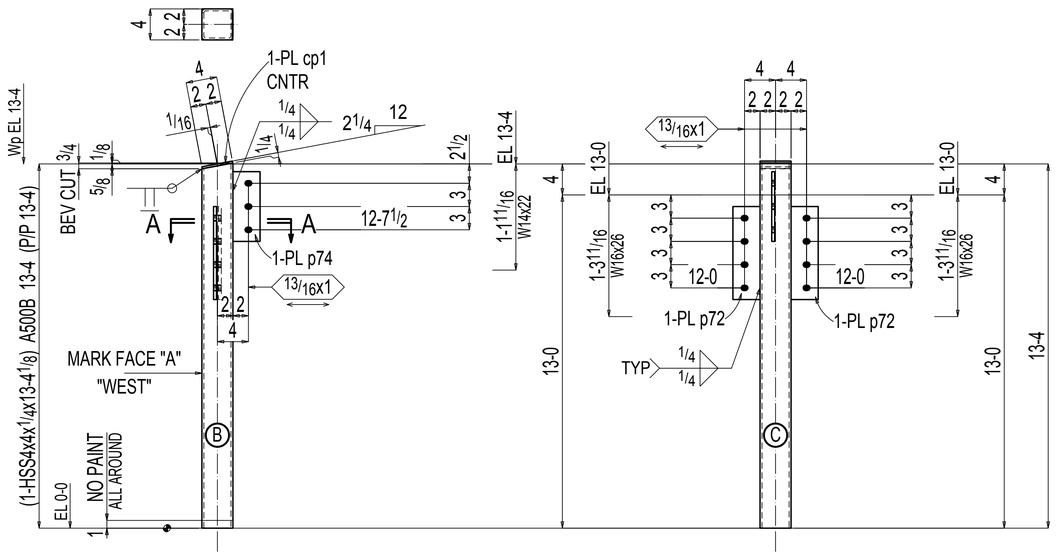

Section A-A
6C1

ONE COLUMN 6C1

AT GRID:
2 & A-NEW

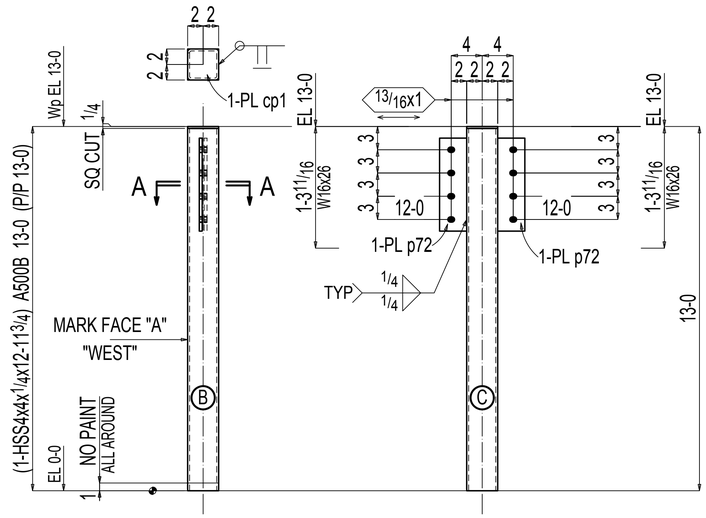

Section A-A
6C2

2 COLUMNS 6C2

AT GRID:
A-NEW & 4
A-NEW & 3

TOTAL WEIGHT THIS DRAWINGS:513

PAINT: 1-S/C PRIMER
OPEN HOLES: 13/16" DIA (UNO) OPEN SLTS: 13/16x1 DIA (UNO) BOLT: 3/4" DIA A325(UNO) EDGE DIST. 1 1/2"(UNO)

MATERIAL	
WIDE FLANGE	A992 (UNO)
PIPE	A53B (UNO)
TUBE	A500B (UNO)
CHANNEL	A36 (UNO)
PLATE,ANGLE,BAR	A36 (UNO)

REF:E8 THRU E20

ALL RUNNING DIMENSIONS FROM END OF MAIN MATERIAL.
ALL VERTICAL SPACING OF HOLES TO BE 3"UNLESS NOTED.
ALL SNIPS TO BE 3/4 X 3/4 UNLESS NOTED.
ALL COPES TO BE RADIUSED.
⊗ DENOTES "CONTACT SURFACE"THIS SIDE OF PLATE.
HOLES IN END PLATES AND OUTSTANDING LEGS OF END CLIPS
X INDICATES LAYOUT MARK FOR FABRICATION
LD=LW,DTI HD=FLT WASHER FL=WROUGHT WASHER
MEMBERS ARE TO BE ERECTED SO THAT MARKED END IS
IN SAME LOCATION AS ON ERECTION DRAWING NO.

NO.	DATE	BY	DESCRIPTION

REV.

NOTICE TO CONTRACTORS AND/OR ERECTORS

MODERN MACHINE SHOP, INC. WILL NOT ACCEPT BACKCHARGERS FOR CORRECTIVE WORK OR REPLACED MATERIALS UNLESS AUTHORIZED AND APPROVED. FAILURE TO COMPLY WITH THIS REQUIREMENT WILL BECOME CONTRACTORS/ERECTORS LIABILITY. ANY QUESTIONS CALL (956) 722-4656

DATE: _____ SIGNATURE: _____

THESE SHOP AND ERECTION DRAWINGS ARE AND SHALL REMAIN THE PROPERTY OF MODERN MACHINE SHOP, INC. THESE SHALL NOT BE USED, REPRODUCED, MODIFIED, OR COPIED IN ANY FORM OR MANNER WITHOUT THE EXPRESS, WRITTEN PERMISSION, CONSENT, AND DUE COMPENSATION TO THE FABRICATOR:
MODERN MACHINE SHOP, INC., COPYRIGHT 2013

CUSTOMER:
ARCHITECT:
PROJECT:
LOCATION:

DRWN _____ DATE _____ FOR APPL _____
CHKD _____ DATE _____ TO SHOP _____

ORDER NO. _____
REV. 0 DWG. 6

BILL OF MATERIAL

NO.	SECTION	FIT.	IN.	TEMP MARK	SHIPPING MARK	WEIGHT UNIT	WEIGHT TOTAL	REMARKS
ONE	COLUMN				7C1	174	174	
1	HSS4x4x1/4	13	4 1/8	7C1		163	163	B1E A500B
1	PL3/8x4	1	0	p185		5	5	A36
1	PL3/8x3 1/2	1	0	p72		4	4	A36
1	PL1/4x4	0	4	cp1		1	1	A36
ONE	COLUMN				7C2	213	213	
1	HSS4x4x1/4	15	1	7C2		184	184	B1E A500B
1	PL3/8x8	1	0	p219		10	10	A36
1	PL3/8x4 1/2	0	9	p241		4	4	A36
1	PL3/8x4	1	0	p185		5	5	A36
1	PL3/8x3 1/2	1	0	p72		4	4	A36
1	PL3/8x3 1/2	0	9	p74		3	3	A36
1	PL1/4x4	0	4	cp1		1	1	A36

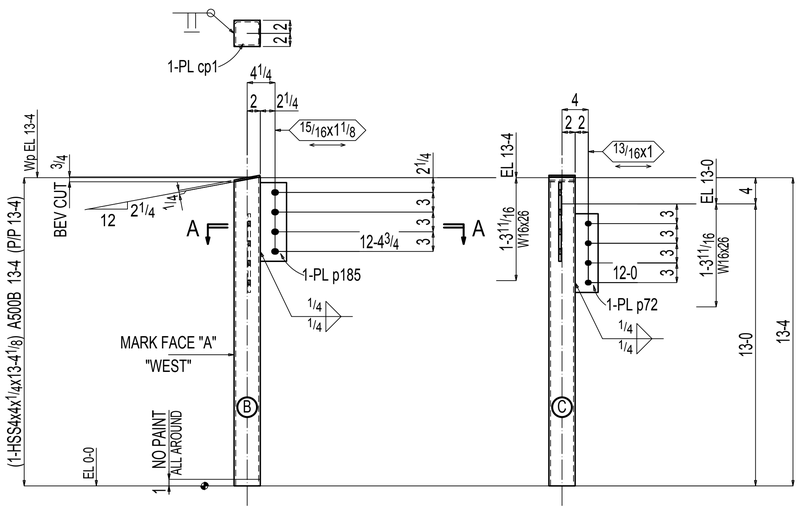

ONE COLUMN 7C1

AT GRID:
5 & A-NEW

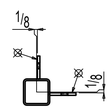

Section A-A
7C1

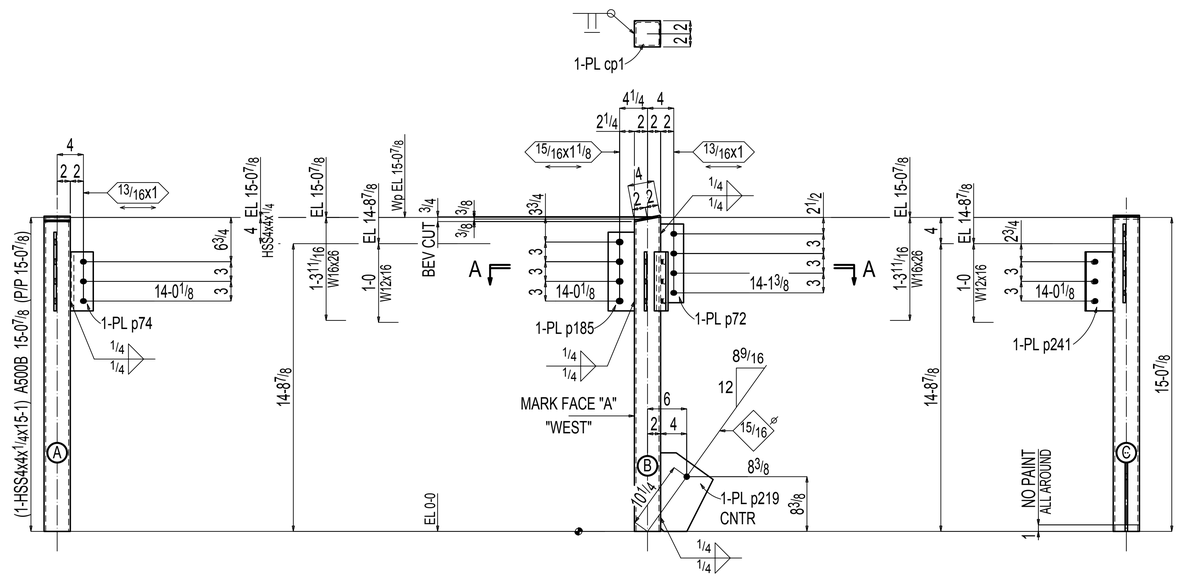

ONE COLUMN 7C2

AT GRID:
5 & B

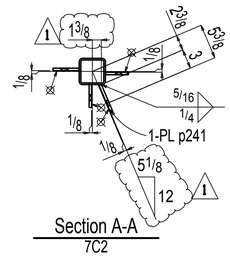

Section A-A
7C2

TOTAL WEIGHT THIS DRAWINGS:387

PAINT: 1-S/C PRIMER
OPEN HOLES: 13/16" DIA (UNO) OPEN SLOTS: 13/16x1 DIA (UNO) BOLT: 3/4" DIA A325(UNO) EDGE DIST: 1 1/2"(UNO)

MATERIAL	
WIDE FLANGE	A992 (UNO)
PIPE	A53B (UNO)
TUBE	A500B (UNO)
CHANNEL	A36 (UNO)
PLATE,ANGLE,BAR	A36 (UNO)

REF:E8 THRU E20

ALL RUNNING DIMENSIONS FROM END OF MAIN MATERIAL.
ALL VERTICAL SPACING OF HOLES TO BE 3"UNLESS NOTED.
ALL SNIPS TO BE 3/4 X 3/4 UNLESS NOTED.
ALL COPES TO BE RADIUSED.
⊗ DENOTES "CONTACT SURFACE"THIS SIDE OF PLATE.
HOLES IN END PLATES AND OUTSTANDING LEGS OF END CLIPS
X INDICATES LAYOUT MARK FOR FABRICATION
LD=LIW,DTI HD=FLT WASHER FL=WROUGHT WASHER
MEMBERS ARE TO BE ERECTED SO THAT MARKED END IS IN SAME LOCATION AS ON ERECTION DRAWING NO.

NO	DATE	BY	DESCRIPTION

REV.

CUSTOMER:
ARCHITECT:
PROJECT:
LOCATION:

DRWN	DATE	FOR APPL.		ORDER NO.	
CHKD	DATE	TO SHOP		REV. 1	DWG. 7

THESE SHOP AND ERECTION DRAWINGS ARE AND SHALL REMAIN THE PROPERTY OF MODERN MACHINE SHOP, INC. THESE SHALL NOT BE USED, REPRODUCED, MODIFIED, OR COPIED IN ANY FORM OR MANNER WITHOUT THE EXPRESS, WRITTEN PERMISSION, CONSENT, AND DUE COMPENSATION TO THE FABRICATOR:
MODERN MACHINE SHOP, INC., COPYRIGHT 2013

NOTICE TO CONTRACTORS AND/OR ERECTORS

MODERN MACHINE SHOP, INC. WILL NOT ACCEPT BACKCHARGERS FOR CORRECTIVE WORK OR REPLACED MATERIALS UNLESS AUTHORIZED AND APPROVED. FAILURE TO COMPLY WITH THIS REQUIREMENT WILL BECOME CONTRACTORS/ERECTORS LIABILITY. ANY QUESTIONS CALL (956) 722-4656

DATE: _____ SIGNATURE: _____

BILL OF MATERIAL

NO.	SECTION	FIT.	IN.	TEMP MARK	SHIPPING MARK	WEIGHT UNIT	WEIGHT TOTAL	REMARKS
ONE	COLUMN				8C1	209	209	
1	HSS4x4x1/4	16	5 15/16	8C1		201	201	S1E A500B
2	PL3/8x3 1/2	0	9	p74		3	7	A36
1	PL1/4x4	0	4	cp1		1	1	A36
ONE	COLUMN				8C2	230	230	
1	HSS4x4x1/4	18	1 7/8	8C2		222	222	S1E A500B
2	PL3/8x3 1/2	0	9	p74		3	7	A36
1	PL1/4x4	0	4	cp1		1	1	A36

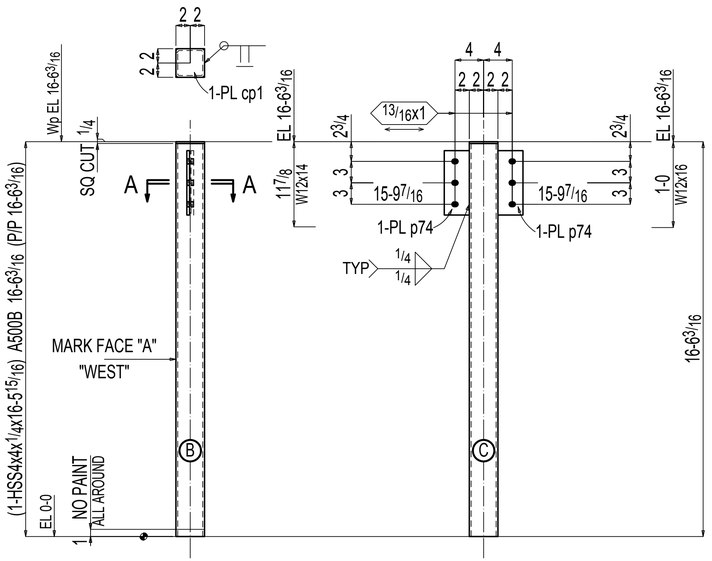

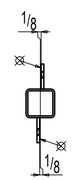

Section A-A
8C1

ONE COLUMN 8C1

AT GRID:
B & 6

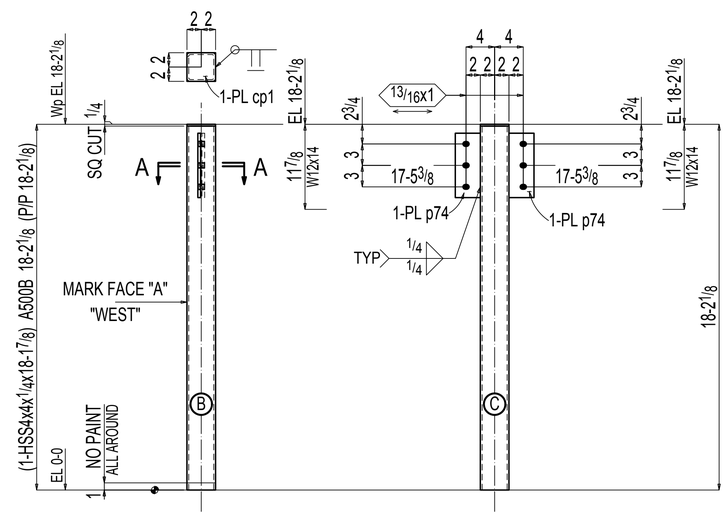

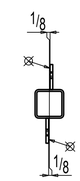

Section A-A
8C2

ONE COLUMN 8C2

AT GRID:
7 & B

TOTAL WEIGHT THIS DRAWINGS:440

PAINT: 1-S/C PRIMER
OPEN HOLES: 13/16" DIA (UNO) OPEN SLOTS: 13/16x1 DIA (UNO) BOLT: 3/4" DIA A325(UNO) EDGE DIST. 1 1/2"(UNO)

MATERIAL	
WIDE FLANGE	A992 (UNO)
PIPE	A53B (UNO)
TUBE	A500B (UNO)
CHANNEL	A36 (UNO)
PLATE,ANGLE,BAR	A36 (UNO)

THESE SHOP AND ERECTION DRAWINGS ARE AND SHALL REMAIN THE PROPERTY OF MODERN MACHINE SHOP, INC. THESE SHALL NOT BE USED, REPRODUCED, MODIFIED, OR COPIED IN ANY FORM OR MANNER WITHOUT THE EXPRESS, WRITTEN PERMISSION, CONSENT, AND DUE COMPENSATION TO THE FABRICATOR:
MODERN MACHINE SHOP, INC., COPYRIGHT 2013

NOTICE TO CONTRACTORS AND/OR ERECTORS

MODERN MACHINE SHOP, INC. WILL NOT ACCEPT BACKCHARGERS FOR CORRECTIVE WORK OR REPLACED MATERIALS UNLESS AUTHORIZED AND APPROVED. FAILURE TO COMPLY WITH THIS REQUIREMENT WILL BECOME CONTRACTORS/ERECTORS LIABILITY. ANY QUESTIONS CALL (866) 722-4656

DATE: _____ SIGNATURE: _____

REF:E8 THRU E20

ALL RUNNING DIMENSIONS FROM END OF MAIN MATERIAL.
ALL VERTICAL SPACING OF HOLES TO BE 3"UNLESS NOTED.
ALL SNIPS TO BE 3/8 X 3/4 UNLESS NOTED.
ALL COPES TO BE RADIUSED.
⊗ DENOTES "CONTACT SURFACE"THIS SIDE OF PLATE.
HOLES IN END PLATES AND OUTSTANDING LEGS OF END CLIPS
X INDICATES LAYOUT MARK FOR FABRICATION.
LD=LW,DT1 HD=FLT WASHER FL=WROUGHT WASHER
MEMBERS ARE TO BE ERECTED SO THAT MARKED END IS IN SAME LOCATION AS ON ERECTION DRAWING NO.

NO.	DATE	BY	DESCRIPTION

REV.

CUSTOMER: _____
ARCHITECT: _____
PROJECT: _____
LOCATION: _____

DRWN _____ DATE _____ FOR APPL _____
CHKD _____ DATE _____ TO SHOP _____

ORDER NO. _____
REV. 0 DWG. 8

BILL OF MATERIAL

NO.	SECTION	FIT.	IN.	TEMP MARK	SHIPPING MARK	WEIGHT UNIT	WEIGHT TOTAL	REMARKS
ONE	COLUMN				9C1	280	280	
1	HSS4x4x1/4	22	1 15/16	9C1		271	271	B1E A500B
1	PL3/8x3 1/2	1	0	p72		4	4	A36
1	PL3/8x3 1/2	0	9	p74		3	3	A36
1	PL1/4x4	0	4	cp1		1	1	A36
ONE	COLUMN				9C2	495	495	
1	HSS8x8x1/4	18	11 3/4	9C2		490	490	S1E A500B
1	L2x2x1/4	0	2	a26		1	1	A36
1	PL1/4x8	0	8	cp2		5	5	A36
	FIELD BOLTS							
1	3/4 Dia A325N	0	10 1/2					+2HD WASH

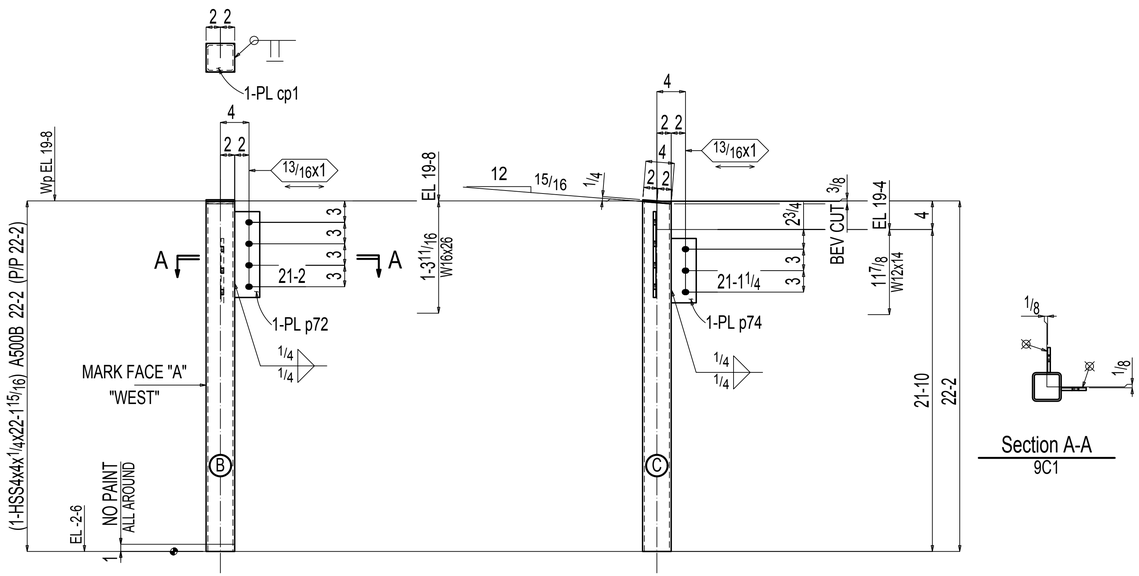

ONE COLUMN 9C1

AT GRID:
8 & B

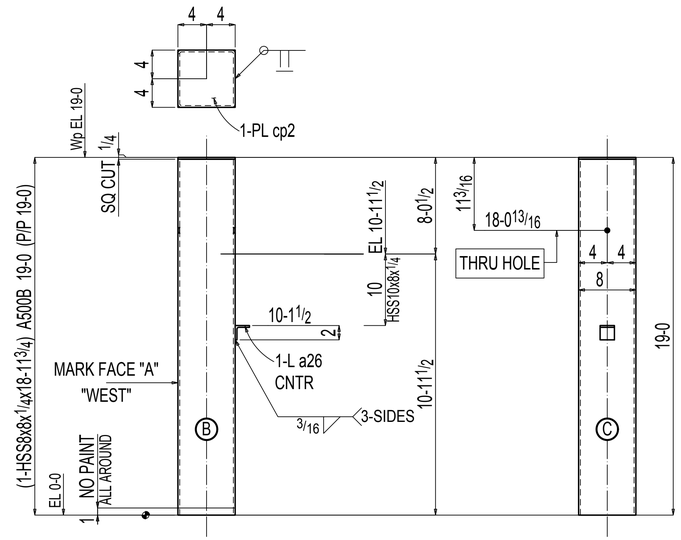

ONE COLUMN 9C2

AT GRID:
B & 8.1

TOTAL WEIGHT THIS DRAWINGS:775

PAINT: 1-S/C PRIMER
OPEN HOLES: 13/16" DIA (UNO) OPEN SLTS: 13/16x1 DIA (UNO) BOLT: 3/4" DIA A325(UNO) EDGE DIST. 1 1/2"(UNO)

MATERIAL	
WIDE FLANGE	A992 (UNO)
PIPE	A53B (UNO)
TUBE	A500B (UNO)
CHANNEL	A36 (UNO)
PLATE,ANGLE,BAR	A36 (UNO)

THESE SHOP AND ERECTION DRAWINGS ARE AND SHALL REMAIN THE PROPERTY OF MODERN MACHINE SHOP, INC. THESE SHALL NOT BE USED, REPRODUCED, MODIFIED, OR COPIED IN ANY FORM OR MANNER WITHOUT THE EXPRESS, WRITTEN PERMISSION, CONSENT, AND DUE COMPENSATION TO THE FABRICATOR:
MODERN MACHINE SHOP, INC., COPYRIGHT 2013

NOTICE TO CONTRACTORS AND/OR ERECTORS

MODERN MACHINE SHOP, INC. WILL NOT ACCEPT BACKCHARGERS FOR CORRECTIVE WORK OR REPLACED MATERIALS UNLESS AUTHORIZED AND APPROVED. FAILURE TO COMPLY WITH THIS REQUIREMENT WILL BECOME CONTRACTORS/ERECTORS LIABILITY. ANY QUESTIONS CALL (956) 722-4656

DATE: _____ SIGNATURE: _____

REF:E8 THRU E20

ALL RUNNING DIMENSIONS FROM END OF MAIN MATERIAL.
ALL VERTICAL SPACING OF HOLES TO BE 3"UNLESS NOTED.
ALL SNIPS TO BE 3/4 X 3/4 UNLESS NOTED.
ALL COPES TO BE RADIUSED.
⊗ DENOTES "CONTACT SURFACE"THIS SIDE OF PLATE
HOLES IN END PLATES AND OUTSTANDING LEGS OF END CLIPS
X INDICATES LAYOUT MARK FOR FABRICATION.
LD=LIW,DTI HD=FLT WASHER FL=WROUGHT WASHER
MEMBERS ARE TO BE ERECTED SO THAT MARKED END IS IN SAME LOCATION AS ON ERECTION DRAWING NO.

NO.	DATE	BY	DESCRIPTION

REV.

CUSTOMER:
ARCHITECT:
PROJECT:
LOCATION:

DRWN _____ DATE _____ FOR APPL. _____
CHKD _____ DATE _____ TO SHOP _____

ORDER NO. _____
REV. 0 DWG. 9

BILL OF MATERIAL

NO.	SECTION	FIT.	IN.	TEMP MARK	SHIPPING MARK	WEIGHT UNIT	WEIGHT TOTAL	REMARKS
ONE	COLUMN				10C1	495	495	
1	HSS8x8x1/4	18	11 3/4	10C1		490	490	S1E A500B
1	L2x2x1/4	0	2	a26		1	1	A36
1	PL1/4x8	0	8	cp2		5	5	A36
	FIELD BOLTS							
1	3/4 Dia A325N	0	10 1/2					+2HD WASH
ONE	COLUMN				10C2	308	308	
1	HSS5x5x1/4	18	3 1/2	10C2		286	286	S1E A500B
1	PL1/2x6	0	11 1/2	p70		10	10	A36
1	PL3/8x8 7/8	1	1 1/16	p231		12	12	A36

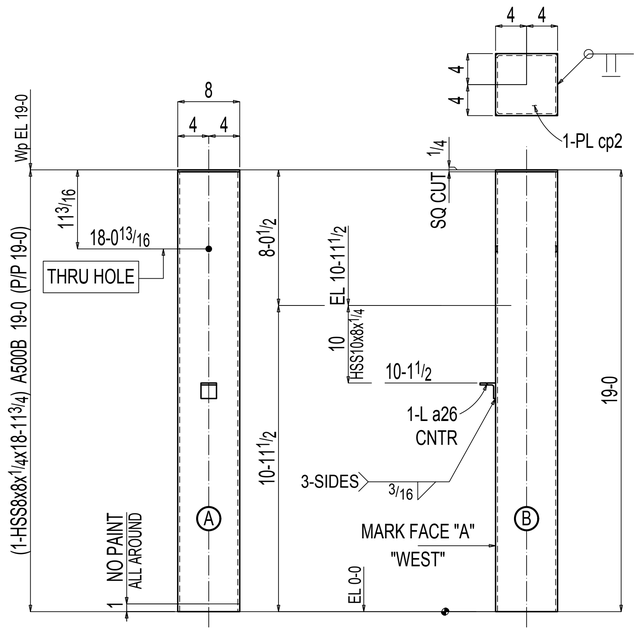

ONE COLUMN 10C1

AT GRID:
D.1 & 8.1

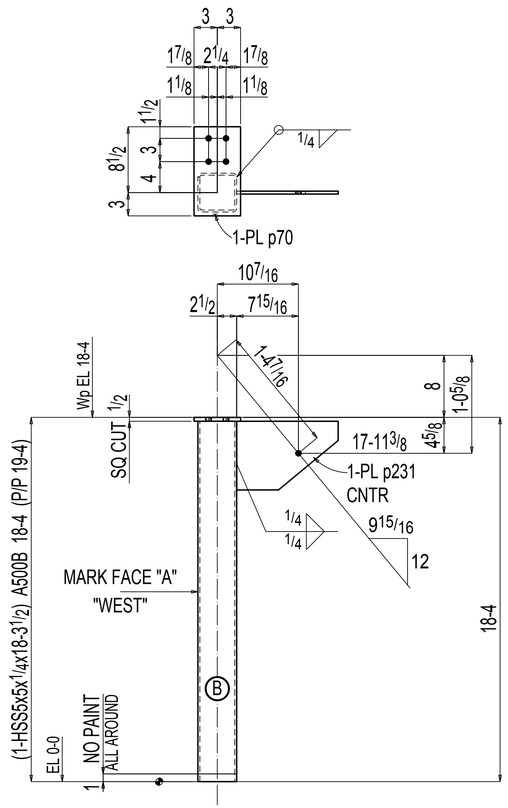

ONE COLUMN 10C2

AT GRID:
E & 8.1

TOTAL WEIGHT THIS DRAWINGS:840

MATERIAL	
WIDE FLANGE	A992 (UNO)
PIPE	A53B (UNO)
TUBE	A500B (UNO)
CHANNEL	A36 (UNO)
PLATE,ANGLE,BAR	A36 (UNO)

REF:E8 THRU E20

ALL RUNNING DIMENSIONS FROM END OF MAIN MATERIAL
ALL VERTICAL SPACING OF HOLES TO BE 3"UNLESS NOTED.
ALL SNIPS TO BE 3/4 X 3/4 UNLESS NOTED.
ALL COPES TO BE RADIUSED.
⊗ DENOTES "CONTACT SURFACE"THIS SIDE OF PLATE.
HOLES IN END PLATES AND OUTSTANDING LEGS OF END CLIPS
X INDICATES LAYOUT MARK FOR FABRICATION
LD=LW,DTI HD=FLT WASHER FL=WROUGHT WASHER
MEMBERS ARE TO BE ERECTED SO THAT MARKED END IS
IN SAME LOCATION AS ON ERECTION DRAWING NO.

THESE SHOP AND ERECTION DRAWINGS ARE AND SHALL REMAIN THE PROPERTY OF MODERN MACHINE SHOP, INC. THESE SHALL NOT BE USED, REPRODUCED, MODIFIED, OR COPIED IN ANY FORM OR MANNER WITHOUT THE EXPRESS, WRITTEN PERMISSION, CONSENT, AND DUE COMPENSATION TO THE FABRICATOR:
MODERN MACHINE SHOP, INC., COPYRIGHT 2013

NOTICE TO CONTRACTORS AND/OR ERECTORS

MODERN MACHINE SHOP, INC. WILL NOT ACCEPT BACKCHARGERS FOR CORRECTIVE WORK OR REPLACED MATERIALS UNLESS AUTHORIZED AND APPROVED. FAILURE TO COMPLY WITH THIS REQUIREMENT WILL BECOME CONTRACTORS/ERECTORS LIABILITY. ANY QUESTIONS CALL (955) 722-4656

DATE: _____ SIGNATURE: _____

NO.	DATE	BY	DESCRIPTION

REV.

PAINT: 1-S/C PRIMER
OPEN HOLES: 13/16x1" DIA (UNO) OPEN SLOTS: 13/16x1 DIA (UNO) BOLT: 3/4" DIA A325(UNO) EDGE DIST. 1 1/2"(UNO)

CUSTOMER:
ARCHITECT:
PROJECT:
LOCATION:

DRWN _____ DATE _____ FOR APPL. _____
CHKD _____ DATE _____ TO SHOP _____

ORDER NO. _____
REV. 0 DWG. 10

BILL OF MATERIAL

NO.	SECTION	FIT.	IN.	TEMP MARK	SHIPPING MARK	WEIGHT UNIT	WEIGHT TOTAL	REMARKS
ONE	COLUMN				11C1	581	581	
1	HSS8x8x1/4	21	10	11C1		564	564	A500B
1	L2x2x1/4	0	2	a26		1	1	A36
1	PL3/8x10 1/4	1	3 3/4	p226		17	17	A36
	FIELD BOLTS							
1	3/4 Dia A325N	0	10 1/2					+2HD WASH
ONE	COLUMN				11C2	564	564	
1	HSS8x8x1/4	21	10	11C2		564	564	A500B
1	L2x2x1/4	0	2	a26		1	1	A36
	FIELD BOLTS							
1	3/4 Dia A325N	0	10 1/2					+2HD WASH
ONE	COLUMN				11C3	420	420	
1	HSS6x6x1/4	21	10	11C3		415	415	A500B
1	PL3/8x3 1/2	1	0	p72		4	4	A36

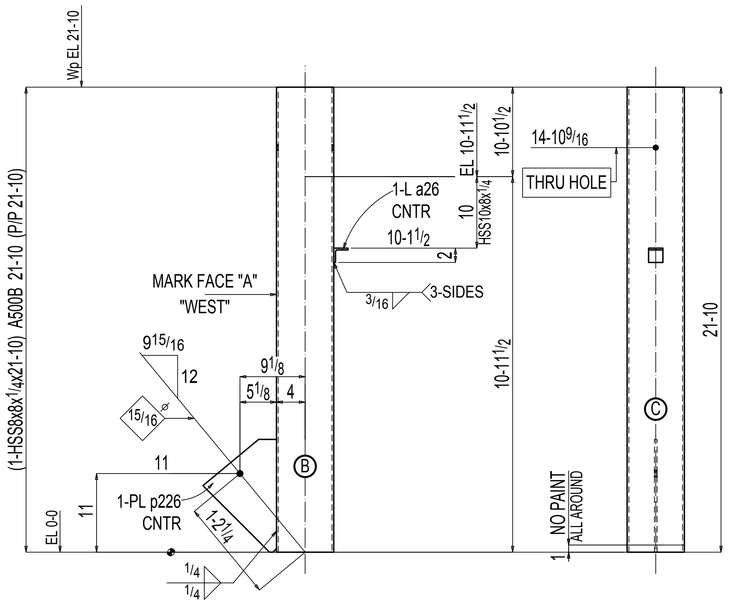

ONE COLUMN 11C1

AT GRID:
E.7 & 8.1

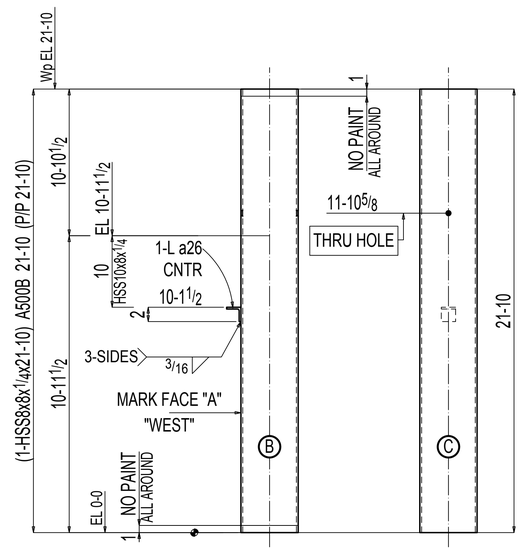

ONE COLUMN 11C2

AT GRID:
E.9 & 8.1

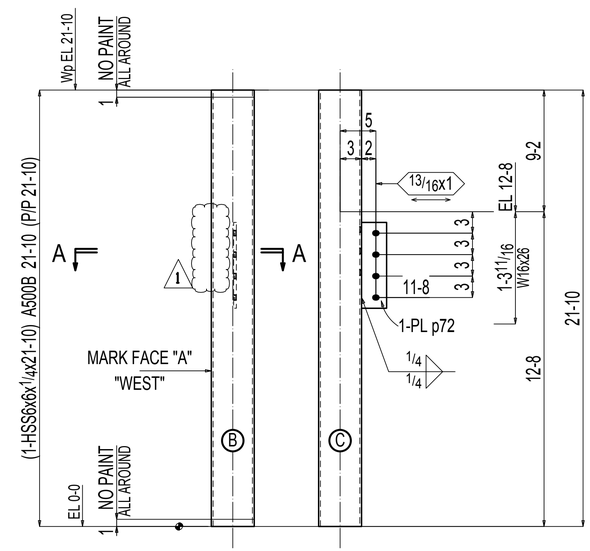

ONE COLUMN 11C3

AT GRID:
F & 8.1

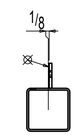

Section A-A
11C3

TOTAL WEIGHT THIS DRAWINGS:1560

PAINT: 1-S/C PRIMER
OPEN HOLES: 13/16" DIA (UNO) OPEN SLOTS: 13/16x1 DIA (UNO) BOLT: 3/4" DIA A325(UNO) EDGE DIST. 1 1/2"(UNO)

MATERIAL	
WIDE FLANGE	A992 (UNO)
PIPE	A53B (UNO)
TUBE	A500B (UNO)
CHANNEL	A36 (UNO)
PLATE,ANGLE,BAR	A36 (UNO)

REF:E8 THRU E20

ALL RUNNING DIMENSIONS FROM END OF MAIN MATERIAL.
ALL VERTICAL SPACING OF HOLES TO BE 3"UNLESS NOTED.
ALL SNIPS TO BE 3/8 X 3/4 UNLESS NOTED.
ALL COPES TO BE RADIUSED.
⊗ DENOTES "CONTACT SURFACE"THIS SIDE OF PLATE.
HOLES IN END PLATES AND OUTSTANDING LEGS OF END CLIPS
X INDICATES LAYOUT MARK FOR FABRICATION
LD=LW,DTI HD=FLT WASHER FL=WROUGHT WASHER
MEMBERS ARE TO BE ERECTED SO THAT MARKED END IS
IN SAME LOCATION AS ON ERECTION DRAWING NO.

NO	DATE	BY	DESCRIPTION

REV.

NOTICE TO CONTRACTORS AND/OR ERECTORS

MODERN MACHINE SHOP, INC. WILL NOT ACCEPT BACKCHARGERS FOR CORRECTIVE WORK OR REPLACED MATERIALS UNLESS AUTHORIZED AND APPROVED. FAILURE TO COMPLY WITH THIS REQUIREMENT WILL BECOME CONTRACTORS/ERECTORS LIABILITY. ANY QUESTIONS CALL (866) 722-4656

DATE: _____ SIGNATURE: _____

THESE SHOP AND ERECTION DRAWINGS ARE AND SHALL REMAIN THE PROPERTY OF MODERN MACHINE SHOP, INC. THESE SHALL NOT BE USED, REPRODUCED, MODIFIED, OR COPIED IN ANY FORM OR MANNER WITHOUT THE EXPRESS, WRITTEN PERMISSION, CONSENT, AND DUE COMPENSATION TO THE FABRICATOR:
MODERN MACHINE SHOP, INC., COPYRIGHT 2013

CUSTOMER:
ARCHITECT:
PROJECT:
LOCATION:

DRWN	DATE	FOR APPL.	ORDER NO.
CHKD	DATE	TO SHOP	REV. 1 DWG. 11

BILL OF MATERIAL

NO.	SECTION	FIT.	IN.	TEMP MARK	SHIPPING MARK	WEIGHT UNIT	WEIGHT TOTAL	REMARKS
ONE	COLUMN				12C3	204	204	
1	PIPE 4 STD	18	1 7/8	12C3		196	196	A53B
2	PL 3/8x3 1/2	0	9	p74		3	7	A36
1	RPL 1/4x4 1/2			p76		1	1	A36

12C1 & 12C2 NO LONGER REQUIRED.

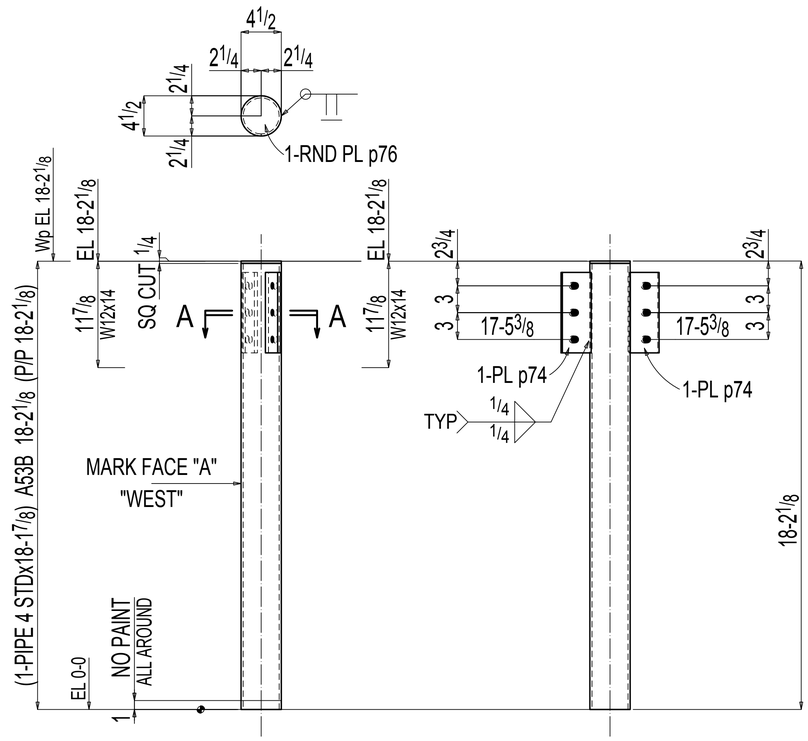

ONE COLUMN 12C3

AT GRID:
7 & D

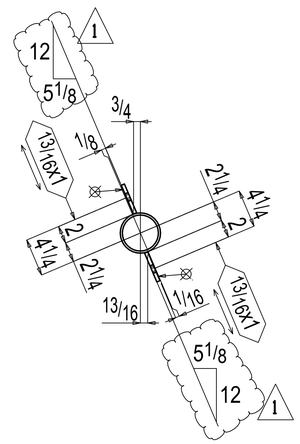

Section A-A
12C3

TOTAL WEIGHT THIS DRAWINGS:624

PAINT: 1-S/C PRIMER
OPEN HOLES: 13/16" DIA (UNO) OPEN SLTS: 13/16x1 DIA (UNO) BOLT: 3/4" DIA A325(UNO) EDGE DIST: 1 1/2"(UNO)

MATERIAL	
WIDE FLANGE	A992 (UNO)
PIPE	A53B (UNO)
TUBE	A500B (UNO)
CHANNEL	A36 (UNO)
PLATE,ANGLE,BAR	A36 (UNO)

THESE SHOP AND ERECTION DRAWINGS ARE AND SHALL REMAIN THE PROPERTY OF MODERN MACHINE SHOP, INC. THESE SHALL NOT BE USED, REPRODUCED, MODIFIED, OR COPIED IN ANY FORM OR MANNER WITHOUT THE EXPRESS, WRITTEN PERMISSION, CONSENT, AND DUE COMPENSATION TO THE FABRICATOR:
MODERN MACHINE SHOP, INC., COPYRIGHT 2013

NOTICE TO CONTRACTORS AND/OR ERECTORS

MODERN MACHINE SHOP, INC. WILL NOT ACCEPT BACKCHARGERS FOR CORRECTIVE WORK OR REPLACED MATERIALS UNLESS AUTHORIZED AND APPROVED. FAILURE TO COMPLY WITH THIS REQUIREMENT WILL BECOME CONTRACTORS/ERECTORS LIABILITY. ANY QUESTIONS CALL (956) 722-4656

DATE: _____ SIGNATURE: _____

REF:E8 THRU E20

ALL RUNNING DIMENSIONS FROM END OF MAIN MATERIAL.
ALL VERTICAL SPACING OF HOLES TO BE 3"UNLESS NOTED.
ALL SNIPS TO BE 3/4 X 3/4 UNLESS NOTED.
ALL COPES TO BE RADIUSED.
⊗ DENOTES "CONTACT SURFACE"THIS SIDE OF PLATE.
HOLES IN END PLATES AND OUTSTANDING LEGS OF END CLIPS
X INDICATES LAYOUT MARK FOR FABRICATION
LD=LIW,DTI HD=FLT WASHER FL=WROUGHT WASHER
MEMBERS ARE TO BE ERECTED SO THAT MARKED END IS IN SAME LOCATION AS ON ERECTION DRAWING NO.

NO	DATE	BY	DESCRIPTION

REV.

CUSTOMER:
ARCHITECT:
PROJECT:
LOCATION:

DRWN _____ DATE _____ FOR APPL. _____ ORDER NO. _____
CHKD _____ DATE _____ TO SHOP _____ REV. 1 DWG. 12

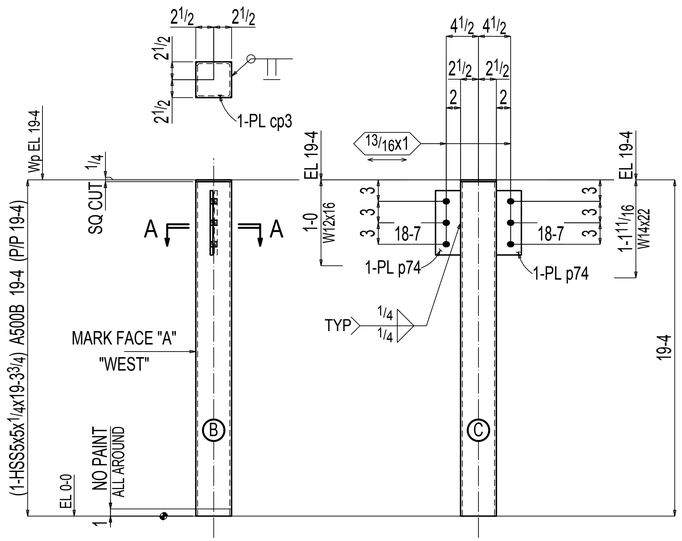

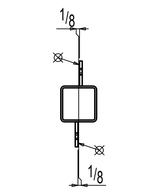

Section A-A
13C1

ONE COLUMN 13C1

AT GRID:
7 & E

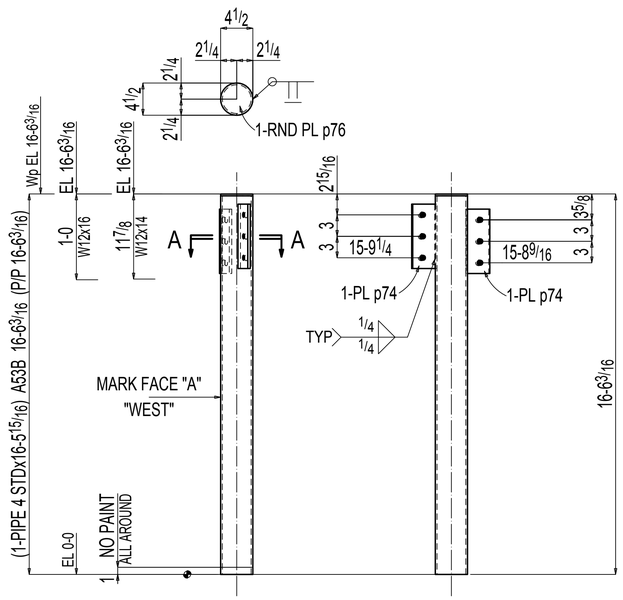

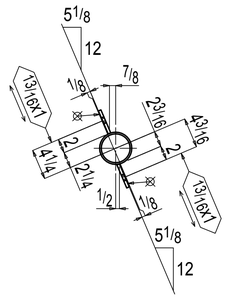

Section A-A
13C2

ONE COLUMN 13C2

AT GRID:
C & 6

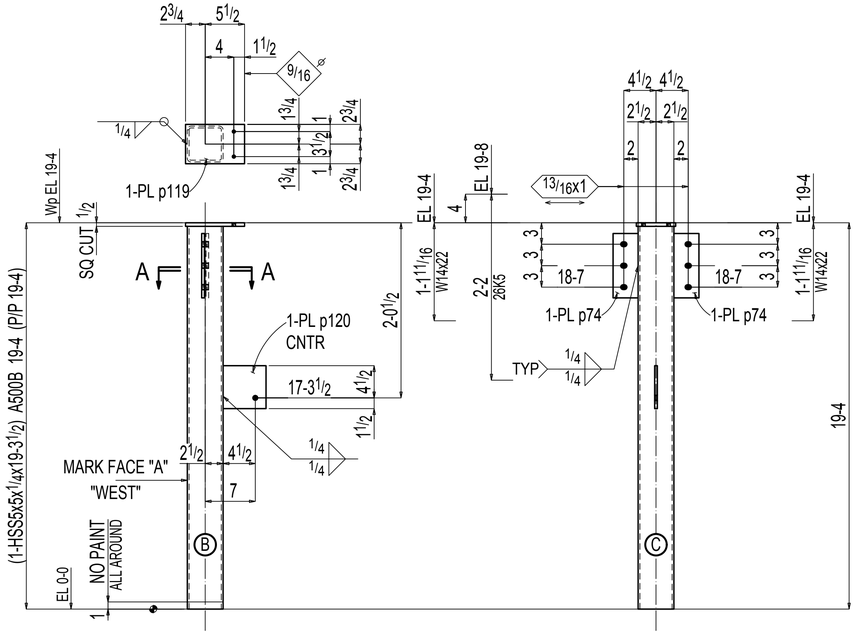

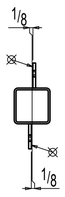

Section A-A
13C3

ONE COLUMN 13C3

AT GRID:
6 & E

BILL OF MATERIAL

NO.	SECTION	FIT.	IN.	TEMP MARK	SHIPPING MARK	WEIGHT UNIT	WEIGHT TOTAL	REMARKS
ONE	COLUMN				13C1	310	310	
1	HSS5x5x1/4	19	3 3/4	13C1		302	302	S1E A500B
2	PL3/8x3 1/2	0	9	p74		3	7	A36
1	PL1/4x5	0	5	cp3		2	2	A36
ONE	COLUMN				13C2	186	186	
1	PIPE 4 STD	16	5 15/16	13C2		178	178	S1E A53B
2	PL3/8x3 1/2	0	9	p74		3	7	A36
1	RPL1/4x4 1/2			p76		1	1	A36
ONE	COLUMN				13C3	318	318	
1	HSS5x5x1/4	19	3 1/2	13C3		301	301	A500B
1	PL1/2x5 1/2	0	8 1/4	p119		6	6	A36
1	PL3/8x6	0	6	p120		4	4	A36
2	PL3/8x3 1/2	0	9	p74		3	7	A36
	FIELD BOLTS							
2	1/2 Dia A307	0	2					

TOTAL WEIGHT THIS DRAWINGS:815

PAINT: 1-S/C PRIMER
OPEN HOLES: 13/16" DIA (UNO) OPEN SLOTS: 13/16x1 DIA (UNO) BOLT: 3/4" DIA A325(UNO) EDGE DIST. 1 1/2"(UNO)

MATERIAL	
WIDE FLANGE	A992 (UNO)
PIPE	A53B (UNO)
TUBE	A500B (UNO)
CHANNEL	A36 (UNO)
PLATE,ANGLE,BAR	A36 (UNO)

THESE SHOP AND ERECTION DRAWINGS ARE AND SHALL REMAIN THE PROPERTY OF MODERN MACHINE SHOP, INC. THESE SHALL NOT BE USED, REPRODUCED, MODIFIED, OR COPIED IN ANY FORM OR MANNER WITHOUT THE EXPRESS, WRITTEN PERMISSION, CONSENT, AND DUE COMPENSATION TO THE FABRICATOR:
MODERN MACHINE SHOP, INC., COPYRIGHT 2013

NOTICE TO CONTRACTORS AND/OR ERECTORS

MODERN MACHINE SHOP, INC. WILL NOT ACCEPT BACKCHARGERS FOR CORRECTIVE WORK OR REPLACED MATERIALS UNLESS AUTHORIZED AND APPROVED. FAILURE TO COMPLY WITH THIS REQUIREMENT WILL BECOME CONTRACTORS/ERECTORS LIABILITY. ANY QUESTIONS CALL (956) 722-4656

DATE: _____ SIGNATURE: _____

REF:E8 THRU E20

ALL RUNNING DIMENSIONS FROM END OF MAIN MATERIAL.
ALL VERTICAL SPACING OF HOLES TO BE 3"UNLESS NOTED.
ALL SNIPS TO BE 3/4 X 3/4 UNLESS NOTED.
ALL COPES TO BE RADIUSED.
⊗ DENOTES "CONTACT SURFACE"THIS SIDE OF PLATE.
HOLES IN END PLATES AND OUTSTANDING LEGS OF END CLIPS
X INDICATES LAYOUT MARK FOR FABRICATION.
LD=LIW,DTI HD=FLT WASHER FL=WROUGHT WASHER
MEMBERS ARE TO BE ERECTED SO THAT MARKED END IS IN SAME LOCATION AS ON ERECTION DRAWING NO.

NO.	DATE	REV.	DESCRIPTION

CUSTOMER:
ARCHITECT:
PROJECT:
LOCATION:

DRWN _____ DATE _____ FOR APPL _____ ORDER NO. _____
CHKD _____ DATE _____ TO SHOP _____ REV. 0 DWG. 13

BILL OF MATERIAL

NO.	SECTION	FIT.	IN.	TEMP MARK	SHIPPING MARK	WEIGHT UNIT	WEIGHT TOTAL	REMARKS
ONE	COLUMN				14C1	334	334	
1	HSS5x5x1/4	19	7 3/16	14C1		306	306	S1E A500B
1	PL3/8x8	1	0 11/16	p222		11	11	A36
2	PL3/8x3 1/2	1	0	p72		4	9	A36
2	PL3/8x3 1/2	0	9	p74		3	7	A36
1	PL1/4x5	0	5	cp3		2	2	A36
2	COLUMN				14C2	312	625	
2	HSS5x5x1/4	19	3/4	14C2		302	603	S1E A500B
4	PL3/8x3 1/2	1	0	p72		4	18	A36
2	PL1/4x5	0	5	cp3		2	4	A36

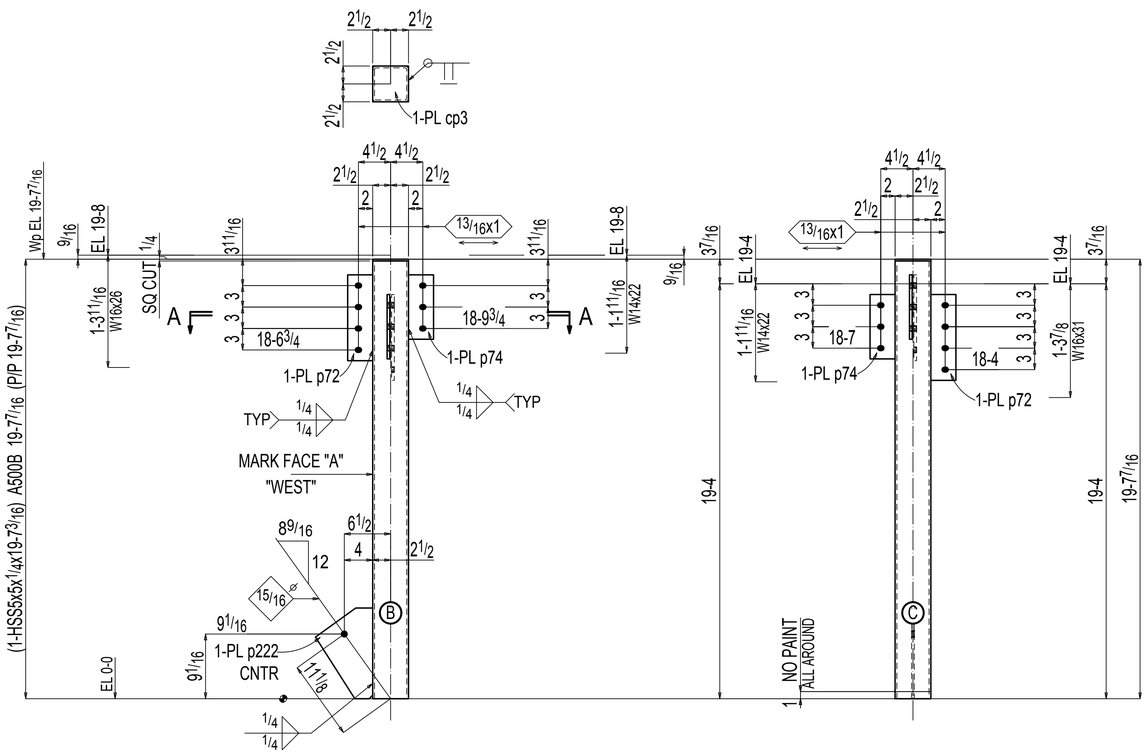

ONE COLUMN 14C1

AT GRID:
5 & E

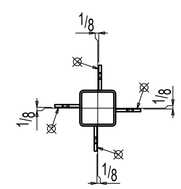

Section A-A
14C1

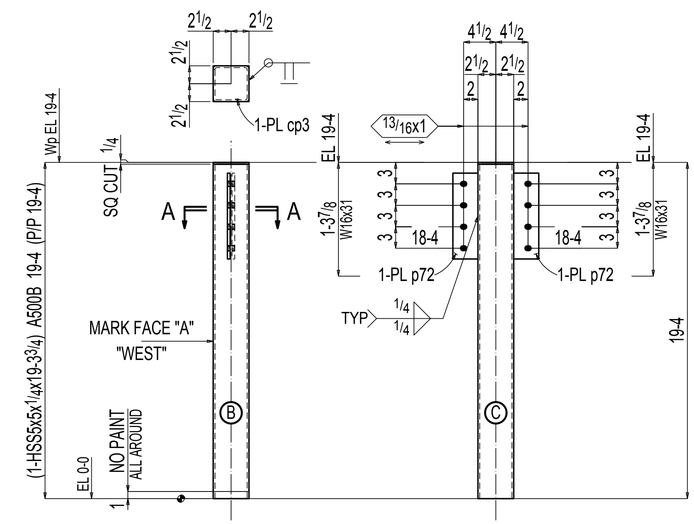

2 COLUMNS 14C2

AT GRID:
4 & E
3 & E

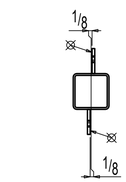

Section A-A
14C2

TOTAL WEIGHT THIS DRAWINGS:959

PAINT: 1-S/C PRIMER
OPEN HOLES: 13/32" DIA (UNO) OPEN SLOTS: 13/32x1 DIA (UNO) BOLT: 3/4" DIA A325(UNO) EDGE DIST: 1 1/2"(UNO)

MATERIAL	
WIDE FLANGE	A992 (UNO)
PIPE	A53B (UNO)
TUBE	A500B (UNO)
CHANNEL	A36 (UNO)
PLATE,ANGLE,BAR	A36 (UNO)

THESE SHOP AND ERECTION DRAWINGS ARE AND SHALL REMAIN THE PROPERTY OF MODERN MACHINE SHOP, INC. THESE SHALL NOT BE USED, REPRODUCED, MODIFIED, OR COPIED IN ANY FORM OR MANNER WITHOUT THE EXPRESS, WRITTEN PERMISSION, CONSENT, AND DUE COMPENSATION TO THE FABRICATOR:
MODERN MACHINE SHOP, INC., COPYRIGHT 2013

NOTICE TO CONTRACTORS AND/OR ERECTORS

MODERN MACHINE SHOP, INC. WILL NOT ACCEPT BACKCHARGERS FOR CORRECTIVE WORK OR REPLACED MATERIALS UNLESS AUTHORIZED AND APPROVED. FAILURE TO COMPLY WITH THIS REQUIREMENT WILL BECOME CONTRACTORS/ERECTORS LIABILITY. ANY QUESTIONS CALL (956) 722-4556

DATE: _____ SIGNATURE: _____

REF:E8 THRU E20

ALL RUNNING DIMENSIONS FROM END OF MAIN MATERIAL.
ALL VERTICAL SPACING OF HOLES TO BE 3"UNLESS NOTED.
ALL SNIPS TO BE 3/8 X 3/4 UNLESS NOTED.
ALL COPES TO BE RADIUSED.
⊗ DENOTES "CONTACT SURFACE"THIS SIDE OF PLATE.
HOLES IN END PLATES AND OUTSTANDING LEGS OF END CLIPS
X INDICATES LAYOUT MARK FOR FABRICATION
LD=LIW,DTI HD=FLT WASHER FL=WROUGHT WASHER
MEMBERS ARE TO BE ERECTED SO THAT MARKED END IS IN SAME LOCATION AS ON ERECTION DRAWING NO.

NO	DATE	BY	DESCRIPTION

REV.

CUSTOMER: _____
ARCHITECT: _____
PROJECT: _____
LOCATION: _____

DRWN _____ DATE _____ FOR APPL. _____
CHKD _____ DATE _____ TO SHOP _____

ORDER NO. _____
REV. 0 DWG. 14

BILL OF MATERIAL

NO.	SECTION	FIT.	IN.	TEMP MARK	SHIPPING MARK	WEIGHT UNIT	WEIGHT TOTAL	REMARKS
ONE	COLUMN				15C1	324	324	
1	HSS5x5x1/4	19	7 3/16	15C1		306	306	S1E A500B
2	PL3/8x3 1/2	1	0	p72		4	9	A36
2	PL3/8x3 1/2	0	9	p74		3	7	A36
1	PL1/4x5	0	5	cp3		2	2	A36

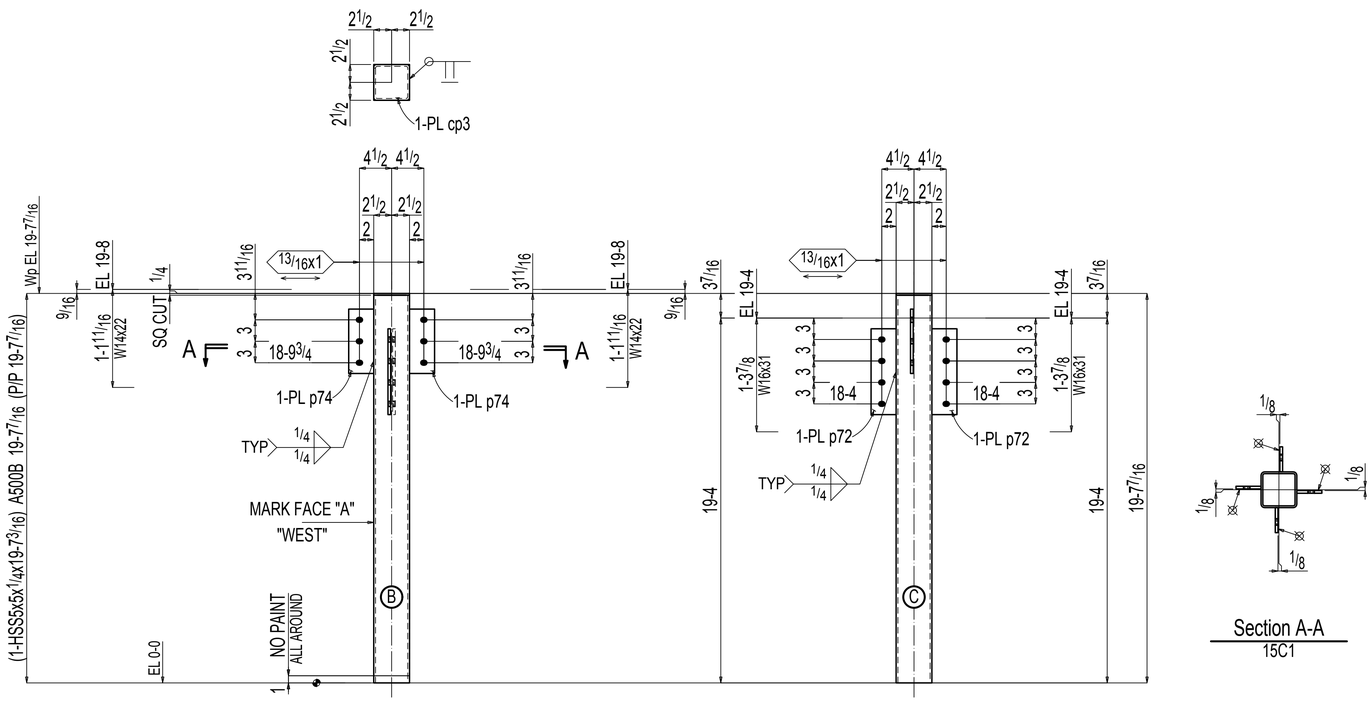

ONE COLUMN 15C1

AT GRID:
2 & E

Section A-A
15C1

15C2 NO LONGER REQUIRED.

TOTAL WEIGHT THIS DRAWINGS:878

PAINT: 1-S/C PRIMER
OPEN HOLES: 13/16" DIA (UNO) OPEN SLOTS: 13/16x1 DIA (UNO) BOLT: 3/4" DIA A325(UNO) EDGE DIST. 1 1/2"(UNO)

MATERIAL	
WIDE FLANGE	A992 (UNO)
PIPE	A53B (UNO)
TUBE	A500B (UNO)
CHANNEL	A36 (UNO)
PLATE,ANGLE,BAR	A36 (UNO)

REF:E8 THRU E20

ALL RUNNING DIMENSIONS FROM END OF MAIN MATERIAL.
ALL VERTICAL SPACING OF HOLES TO BE 3"UNLESS NOTED.
ALL SNIPS TO BE 3/4 X 3/4 UNLESS NOTED.
ALL COPES TO BE RADIUSED.
⊗ DENOTES "CONTACT SURFACE"THIS SIDE OF PLATE.
HOLES IN END PLATES AND OUTSTANDING LEGS OF END CLIPS
X INDICATES LAYOUT MARK FOR FABRICATION
LD=LIW,DTI HD=FLT WASHER FL=WROUGHT WASHER
MEMBERS ARE TO BE ERECTED SO THAT MARKED END IS IN SAME LOCATION AS ON ERECTION DRAWING NO.

NOTICE TO CONTRACTORS AND/OR ERECTORS

MODERN MACHINE SHOP, INC. WILL NOT ACCEPT BACKCHARGERS FOR CORRECTIVE WORK OR REPLACED MATERIALS UNLESS AUTHORIZED AND APPROVED. FAILURE TO COMPLY WITH THIS REQUIREMENT WILL BECOME CONTRACTORS/ERECTORS LIABILITY. ANY QUESTIONS CALL (956) 722-4656

DATE: _____ SIGNATURE: _____

THESE SHOP AND ERECTION DRAWINGS ARE AND SHALL REMAIN THE PROPERTY OF MODERN MACHINE SHOP, INC. THESE SHALL NOT BE USED, REPRODUCED, MODIFIED, OR COPIED IN ANY FORM OR MANNER WITHOUT THE EXPRESS, WRITTEN PERMISSION, CONSENT, AND DUE COMPENSATION TO THE FABRICATOR:
MODERN MACHINE SHOP, INC., COPYRIGHT 2013

NO.	DATE	BY	DESCRIPTION

REV.

CUSTOMER:
ARCHITECT:
PROJECT:
LOCATION:

DRWN ____ DATE ____ FOR APPL. ____ ORDER NO. ____
CHKD ____ DATE ____ TO SHOP ____ REV. 0 DWG. 15

BILL OF MATERIAL

NO.	SECTION	FIT.	IN.	TEMP MARK	SHIPPING MARK	WEIGHT UNIT	WEIGHT TOTAL	REMARKS
2	COLUMN				16C1	172	344	Galv
2	HSS4x4x1/4	14	1	16C1		172	344	A500B
2	COLUMN				16C2	160	319	Galv
2	HSS4x4x1/4	13	1	16C2		160	319	A500B

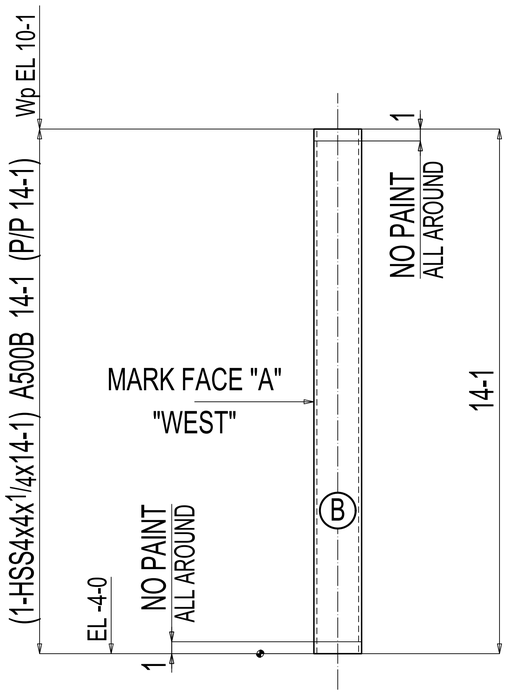

2 COLUMNS 16C1

AT GRID:
8.2 & E.6
8.2 & E.9

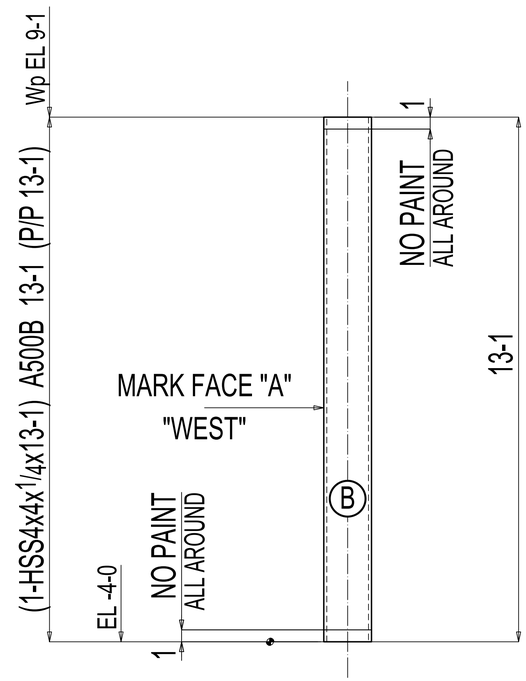

2 COLUMNS 16C2

AT GRID:
0.9 & D.1
0.9 & E.7

TOTAL WEIGHT THIS DRAWINGS:1036

1) GRIND SMOOTH ALL WELD.
2) ALL WELD TO BE SEAL WELD.
3) PLUG VENT HOLE AFTER GALVANIZING.

THESE SHOP AND ERECTION DRAWINGS ARE AND SHALL REMAIN THE PROPERTY OF MODERN MACHINE SHOP, INC. THESE SHALL NOT BE USED, REPRODUCED, MODIFIED, OR COPIED IN ANY FORM OR MANNER WITHOUT THE EXPRESS, WRITTEN PERMISSION, CONSENT, AND DUE COMPENSATION TO THE FABRICATOR:
MODERN MACHINE SHOP, INC., COPYRIGHT 2013

NOTICE TO CONTRACTORS AND/OR ERECTORS

MODERN MACHINE SHOP, INC. WILL NOT ACCEPT BACKCHARGERS FOR CORRECTIVE WORK OR REPLACED MATERIALS UNLESS AUTHORIZED AND APPROVED. FAILURE TO COMPLY WITH THIS REQUIREMENT WILL BECOME CONTRACTORS/ERECTORS LIABILITY. ANY QUESTIONS CALL (956) 722-4656

DATE: _____ SIGNATURE: _____

REF:E8 THRU E20

ALL RUNNING DIMENSIONS FROM END OF MAIN MATERIAL.
ALL VERTICAL SPACING OF HOLES TO BE 3"UNLESS NOTED.
ALL SNIPS TO BE 3/8 X 3/4 UNLESS NOTED.
ALL COPES TO BE RADIUSED.
⊗ DENOTES "CONTACT SURFACE"THIS SIDE OF PLATE.
HOLES IN END PLATES AND OUTSTANDING LEGS OF END CLIPS
X INDICATES LAYOUT MARK FOR FABRICATION.
LD=LIW,DTI HD=FLT WASHER FL=WROUGHT WASHER
MEMBERS ARE TO BE ERECTED SO THAT MARKED END IS IN SAME LOCATION AS ON ERECTION DRAWING NO.

MATERIAL	
WIDE FLANGE	A992 (UNO)
PIPE	A53B (UNO)
TUBE	A500B (UNO)
CHANNEL	A36 (UNO)
PLATE,ANGLE,BAR	A36 (UNO)

NO.	DATE	BY	DESCRIPTION

REV.

PAINT: GALVANIZED
OPEN HOLES: 13/16" DIA (UNO) OPEN SLOTS: 13/16x1 DIA (UNO) BOLT: 3/4" DIA A325(UNO) EDGE DIST: 1 1/2"(UNO)

CUSTOMER:
ARCHITECT:
PROJECT:
LOCATION:

DRWN	DATE	FOR APPL.	ORDER NO.
CHKD	DATE	TO SHOP	REV. 0 DWG. 16

BILL OF MATERIAL 1 QTY'S

QTY	MARK	DESCRIPTION	LENGTH	WEIGHT	REMARKS
ONE	C1	HSS6x6x1/2	20 9 1/8	33	B1E A500C
1	p155	PL3/8x11 3/4	1 11 3/4	30	A36
1	p383	PL1/4x6	0 7 1/4	3	A36
		TOTAL WEIGHT THIS DRAWING :		66	

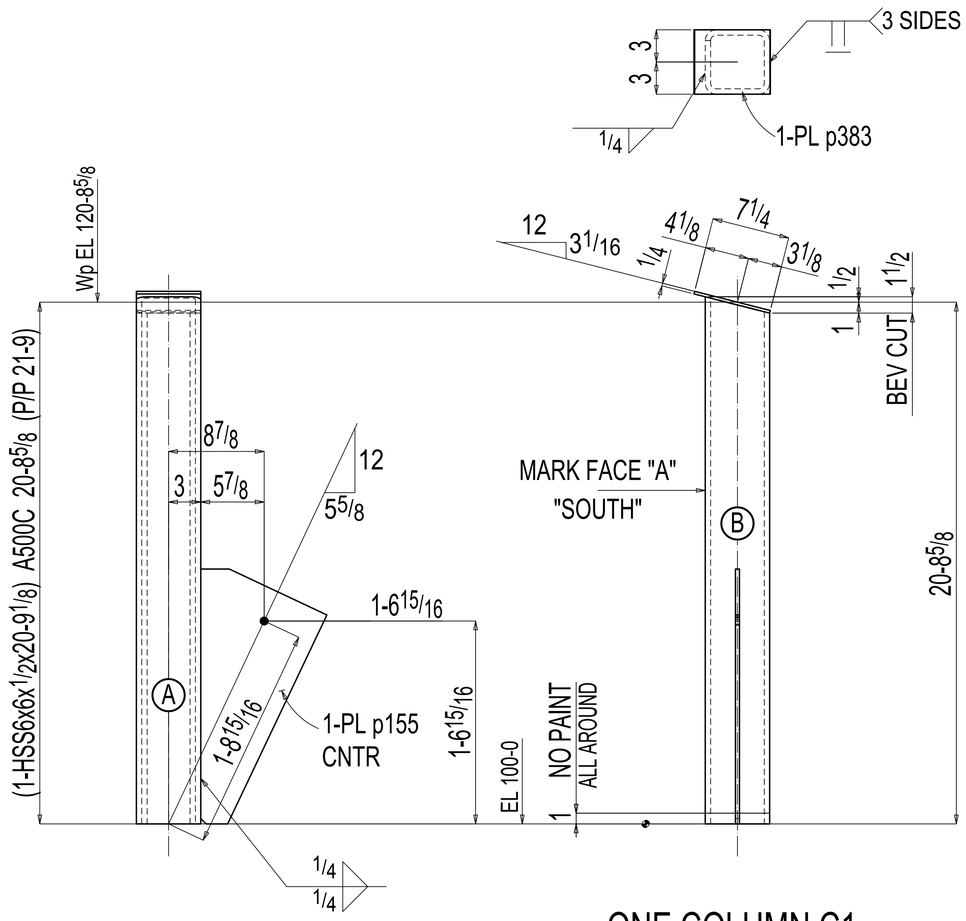

ONE COLUMN C1

AT GRID:
1 & G.5

ALL CLOUDED "APPROVER VERIFY" NOTES RETURNED TO US WITH NO RESPONSE WILL BE UNDERSTOOD TO BE ACCEPTABLE BY THE OWNER AND WILL BE INCORPORATED INTO CONSTRUCTION.

USE WELD SPECS: | ISSUED FOR FAB: | CUTTING: | DRILLED: | FITTING GA: | WELD GA: | CHECKED BY:

GENERAL NOTES:

ALL HOLES ARE 13/16 Ø U.N.O.
COPE RADIUS = 1/2" UNO
SLOT LENGTHS ARE SHOWN OVERALL
FINISH:STD SHOP PRIMER

470.43 lbs EACH

REV	DETAILS	BY	DC	DATE
1				
0				
A				

CUSTOMER REF:

REMARKS:

MARK ID:

PO:

CLIENT:

PROJECT:

TITLE: COLUMN

CATEGORY UNO:

DRAWN: | CHECKED: | JOB No: | DIV: | DWG No: C1 | REV: 1

BILL OF MATERIAL 1 QTY'S						
QTY	MARK	DESCRIPTION	LENGTH		WEIGHT	REMARKS
ONE	C2	HSS8x6x1/2	20	9 3/8	874	B1E A500C
2	a59	L2x2x1/4	0	2	1	A36
1	p116	PL1/4x6	0	8 1/4	4	A36
		TOTAL WEIGHT THIS DRAWING :			879	

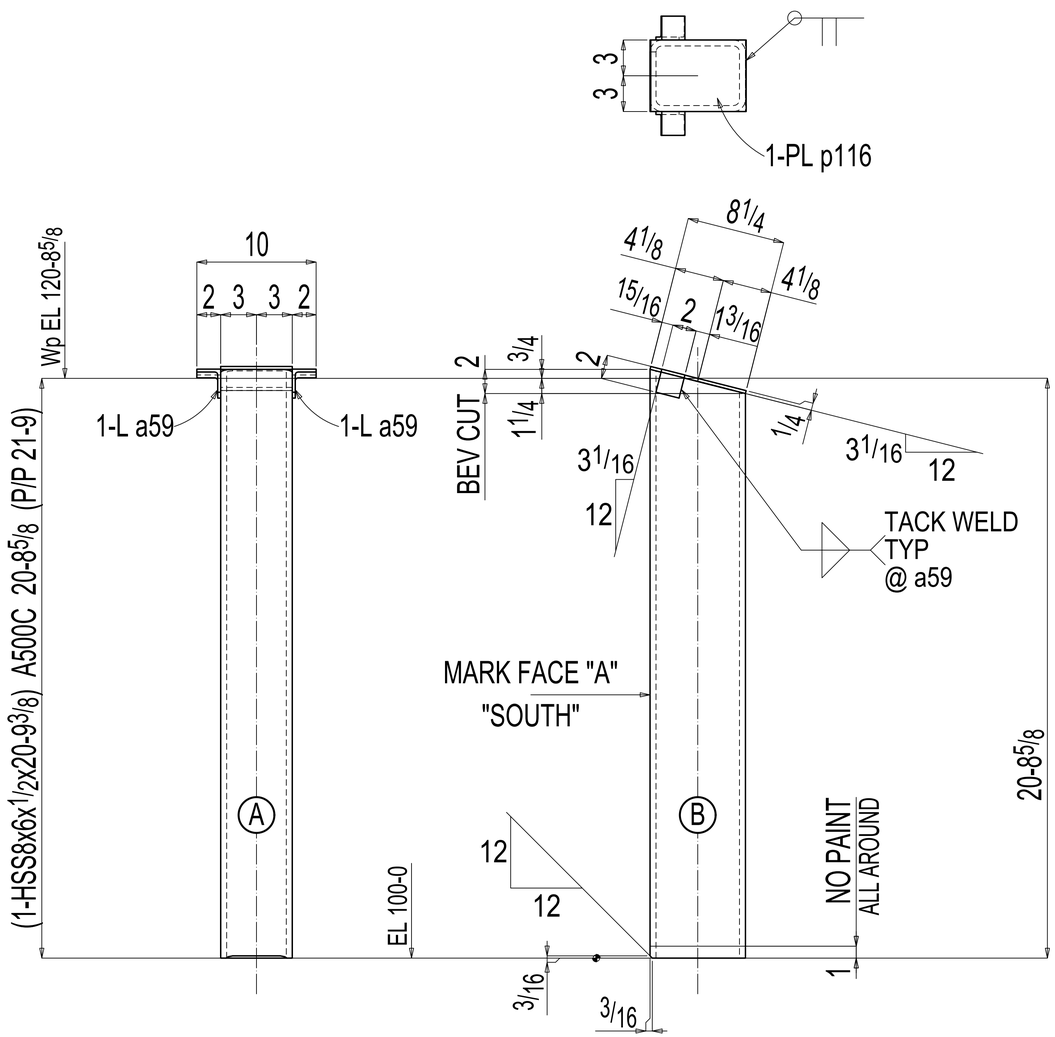

ONE COLUMN C2

AT GRID:
1 & E

ALL CLOUDED "APPROVER VERIFY" NOTES RETURNED TO US WITH NO RESPONSE WILL BE UNDERSTOOD TO BE ACCEPTABLE BY THE OWNER AND WILL BE INCORPORATED INTO CONSTRUCTION.

USE WELD SPECS: | ISSUED FOR FAB: | CUTTING: | DRILLED: | FITTING GA: | WELD GA: | CHECKED BY:

GENERAL NOTES:

ALL HOLES ARE 13/16 Ø U.N.O.
COPE RADIUS = 1/2" UNO
SLOT LENGTHS ARE SHOWN OVERALL
FINISH:STD SHOP PRIMER

470.43 lbs EACH

REV	DETAILS	BY	DC	DATE
0				
A				

REMARKS:

MARK ID:

PO:

CLIENT:

PROJECT:

TITLE: COLUMN

CATEGORY UNO:

CUSTOMER REF:

DRAWN: | CHECKED: | JOB No: | DIV: | DWG No: C2 | REV: 0

BILL OF MATERIAL 2 QTY'S						
QTY	MARK	DESCRIPTION	LENGTH		WEIGHT	REMARKS
ONE	C3	HSS8x6x1/2	20	9 3/8	874	B1E A500C
1	a59	L2x2x1/4	0	2	1	A36
1	p116	PL1/4x6	0	8 1/4	4	A36
		TOTAL WEIGHT THIS DRAWING :			882	

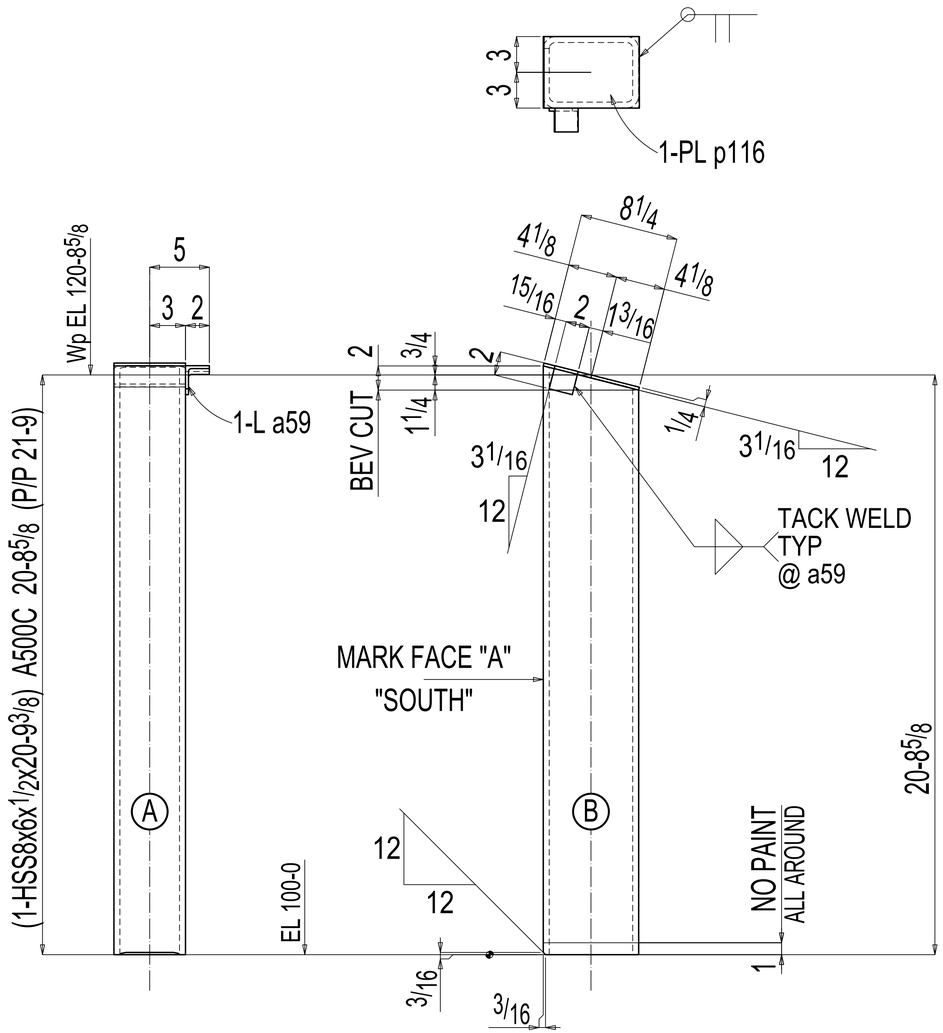

ONE COLUMNS C3

AT GRID:
1 & G

ALL CLOUDED "APPROVER VERIFY" NOTES RETURNED TO US WITH NO RESPONSE WILL BE UNDERSTOOD TO BE ACCEPTABLE BY THE OWNER AND WILL BE INCORPORATED INTO CONSTRUCTION.

USE WELD SPECS: | ISSUED FOR FAB: | CUTTING: | DRILLED: | FITTING GA: | WELD GA: | CHECKED BY:

GENERAL NOTES:

ALL HOLES ARE 13/16 Ø U.N.O.
COPE RADIUS = 1/2" UNO
SLOT LENGTHS ARE SHOWN OVERALL
FINISH:STD SHOP PRIMER

470.43 lbs EACH

REV	DETAILS	BY	DC	DATE
0				
A				

CUSTOMER REF:

REMARKS:

MARK ID:

PO:

CLIENT:

PROJECT:

TITLE: COLUMN

CATEGORY UNO:

DRAWN: | CHECKED: | JOB No: | DIV: | DWG No: C3 | REV: 0

BILL OF MATERIAL 4 QTY'S						
QTY	MARK	DESCRIPTION	LENGTH		WEIGHT	REMARKS
4	C4	HSS8x6x1/2	15	5 1/4	3895	B1E A500C
4	p116	PL1/4x6	0	8 1/4	14	A36
		TOTAL WEIGHT THIS DRAWING :			3913	

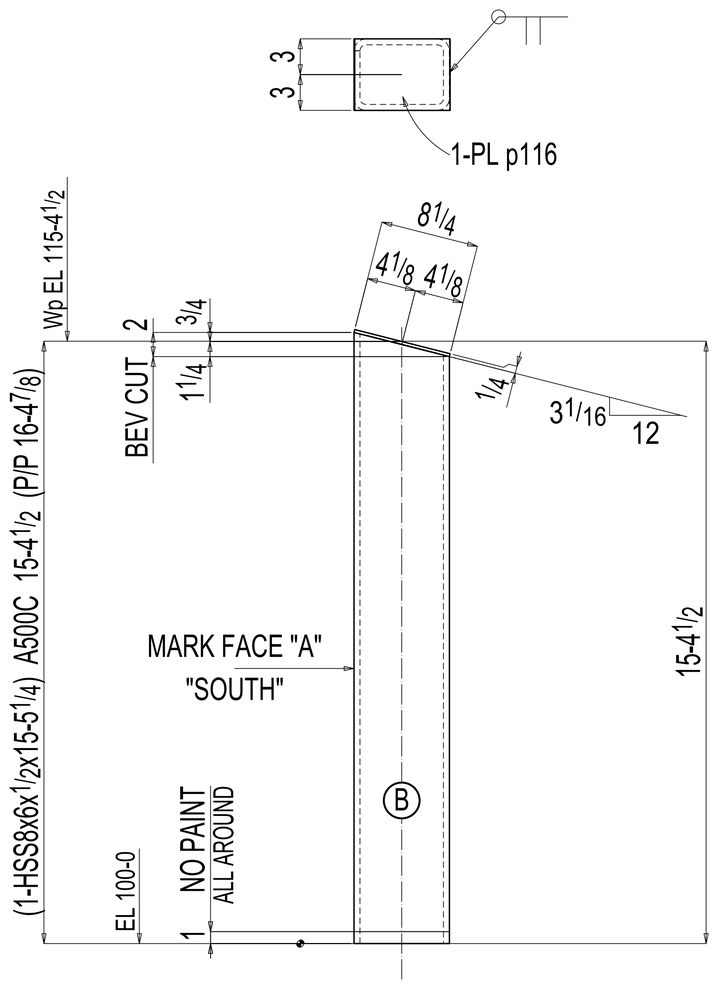

4 COLUMN C4

AT GRID:
2 & G
2 & F
2 & D
2 & C

ALL CLOUDED "APPROVER VERIFY" NOTES RETURNED TO US WITH NO RESPONSE WILL BE UNDERSTOOD TO BE ACCEPTABLE BY THE OWNER AND WILL BE INCORPORATED INTO CONSTRUCTION.

USE WELD SPECS: | ISSUED FOR FAB: | CUTTING: | DRILLED: | FITTING GA: | WELD GA: | CHECKED BY:

GENERAL NOTES:

ALL HOLES ARE 13/16 Ø U.N.O.
COPE RADIUS = 1/2" UNO
SLOT LENGTHS ARE SHOWN OVERALL
FINISH:STD SHOP PRIMER

470.43 lbs EACH

REV	DETAILS	BY	DC	DATE
0				
A				

CUSTOMER REF:

REMARKS:

MARK ID:

PO:

CLIENT:

PROJECT:

TITLE: COLUMN

CATEGORY UNO:

DRAWN: | CHECKED: | JOB No: | DIV: | DWG No: C4 | REV: 0

BILL OF MATERIAL 1 QTY'S						
QTY	MARK	DESCRIPTION	LENGTH		WEIGHT	REMARKS
ONE	C5	HSS6x6x1/2	15	9 1/8	555	B1E A500C
1	p145	PL3/8x11 13/16	1	7 5/8	25	A36
1	p111	PL1/4x6	0	6 3/16	3	A36
		TOTAL WEIGHT THIS DRAWING :			583	

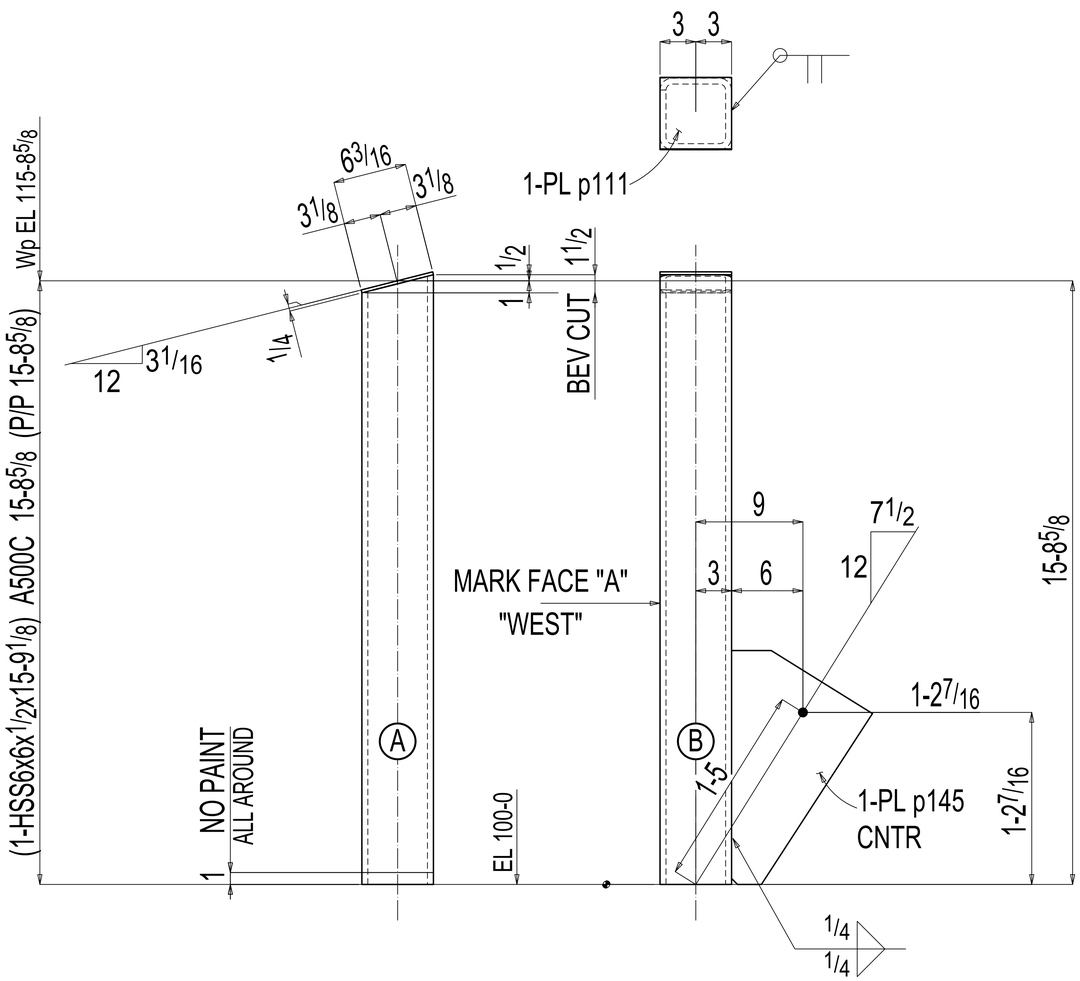

ONE COLUMN C5

AT GRID:
2 & G.5

ALL CLOUDED "APPROVER VERIFY" NOTES RETURNED TO US WITH NO RESPONSE WILL BE UNDERSTOOD TO BE ACCEPTABLE BY THE OWNER AND WILL BE INCORPORATED INTO CONSTRUCTION.

USE WELD SPECS: | ISSUED FOR FAB: | CUTTING: | DRILLED: | FITTING GA: | WELD GA: | CHECKED BY:

GENERAL NOTES:

ALL HOLES ARE 13/16 Ø U.N.O.
COPE RADIUS = 1/2" UNO
SLOT LENGTHS ARE SHOWN OVERALL
FINISH:STD SHOP PRIMER

470.43 lbs EACH

REMARKS:

MARK ID:

PO:

CLIENT:

PROJECT:

TITLE: COLUMN

CATEGORY UNO:

REV	DETAILS	BY	DC	DATE
0				
A				

CUSTOMER REF:

DRAWN: | CHECKED: | JOB No: | DIV: | DWG No: C5 | REV: 0

BILL OF MATERIAL 1 QTY'S

QTY	MARK	DESCRIPTION	LENGTH	WEIGHT	REMARKS
ONE	C6	HSS8x6x1/2	15 5 1/4	649	B1E A500C
1	p116	PL1/4x6	0 8 1/4	4	A36
		TOTAL WEIGHT THIS DRAWING :		653	

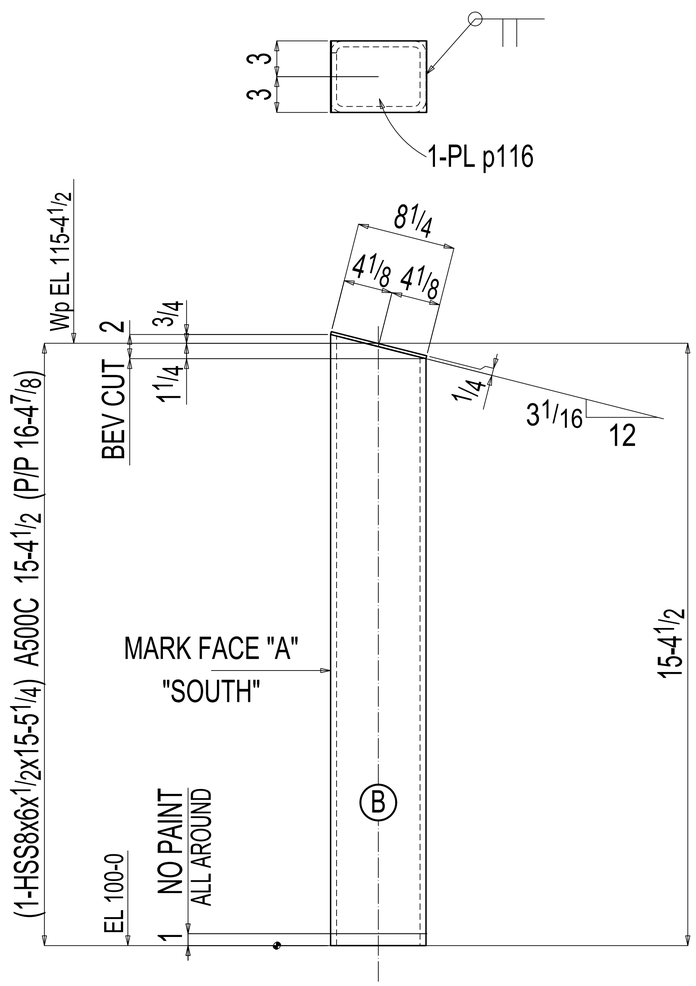

ONE COLUMN C6

AT GRID:
2 & E

ALL CLOUDED "APPROVER VERIFY" NOTES RETURNED TO US WITH NO RESPONSE WILL BE UNDERSTOOD TO BE ACCEPTABLE BY THE OWNER AND WILL BE INCORPORATED INTO CONSTRUCTION.

USE WELD SPECS:

ISSUED FOR FAB:

CUTTING: DRILLED: FITTING GA: WELD GA: CHECKED BY:

REMARKS:

MARK ID:

PO:

CUSTOMER REF:

GENERAL NOTES:

ALL HOLES ARE 13/16 Ø U.N.O.
COPE RADIUS = 1/2" UNO
SLOT LENGTHS ARE SHOWN OVERALL
FINISH:STD SHOP PRIMER

470.43 lbs EACH

REV	DETAILS	BY	DC	DATE
0				
A				

CLIENT:

PROJECT:

TITLE: COLUMN

CATEGORY UNO:

DRAWN: CHECKED:

JOB No: DIV:

DWG No: C6 REV: 0

BILL OF MATERIAL 1 QTY'S						
QTY	MARK	DESCRIPTION	LENGTH		WEIGHT	REMARKS
ONE	C7	HSS8x6x1/2	15	5 1/4	649	B1E A500C
1	a59	L2x2x1/4	0	2	1	A36
1	p116	PL1/4x6	0	8 1/4	4	A36
		TOTAL WEIGHT THIS DRAWING :			654	

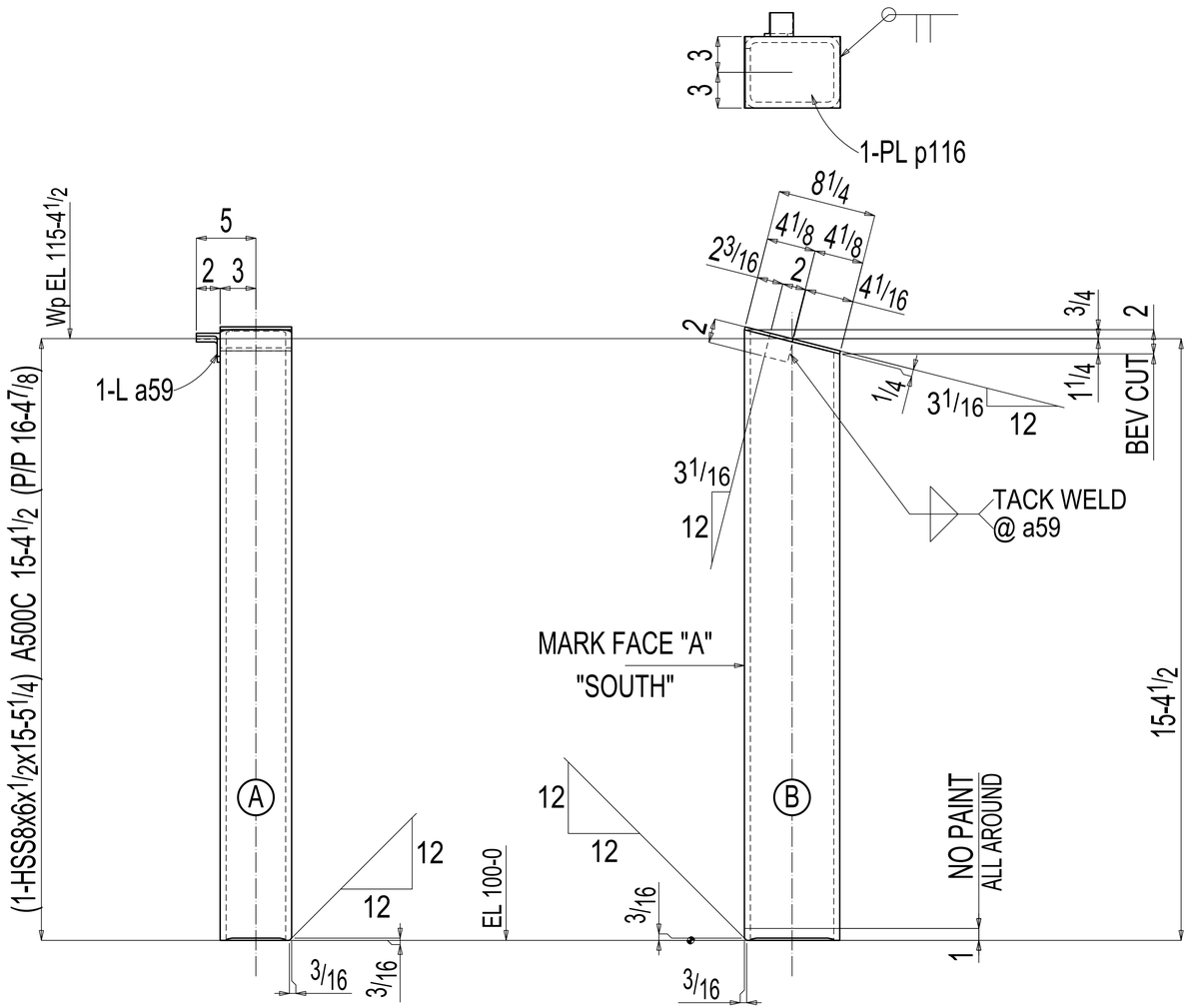

ONE COLUMN C7

AT GRID:
2 & A

ALL CLOUDED "APPROVER VERIFY" NOTES RETURNED TO US WITH NO RESPONSE WILL BE UNDERSTOOD TO BE ACCEPTABLE BY THE OWNER AND WILL BE INCORPORATED INTO CONSTRUCTION.

USE WELD SPECS:

ISSUED FOR FAB:

CUTTING: DRILLED: FITTING GA: WELD GA: CHECKED BY:

GENERAL NOTES:

ALL HOLES ARE 13/16 Ø U.N.O.
COPE RADIUS = 1/2" UNO
SLOT LENGTHS ARE SHOWN OVERALL
FINISH:STD SHOP PRIMER

470.43 lbs EACH

REV	DETAILS	BY	DC	DATE
0				
A				

REMARKS:

MARK ID:

PO:

CLIENT:

PROJECT:

TITLE: COLUMN

CATEGORY UNO:

DRAWN: CHECKED:

JOB No: DIV:

DWG No: C7 REV: 0

CUSTOMER REF:

BILL OF MATERIAL 1 QTY'S						
QTY	MARK	DESCRIPTION	LENGTH		WEIGHT	REMARKS
ONE	C8	HSS6x6x1/2	12	2	1715	B1E A500C
1	a59	L2x2x1/4	0	2	1	A36
1	p111	PL1/4x6	0	6 3/16	3	A36
		TOTAL WEIGHT THIS DRAWING :			1719	

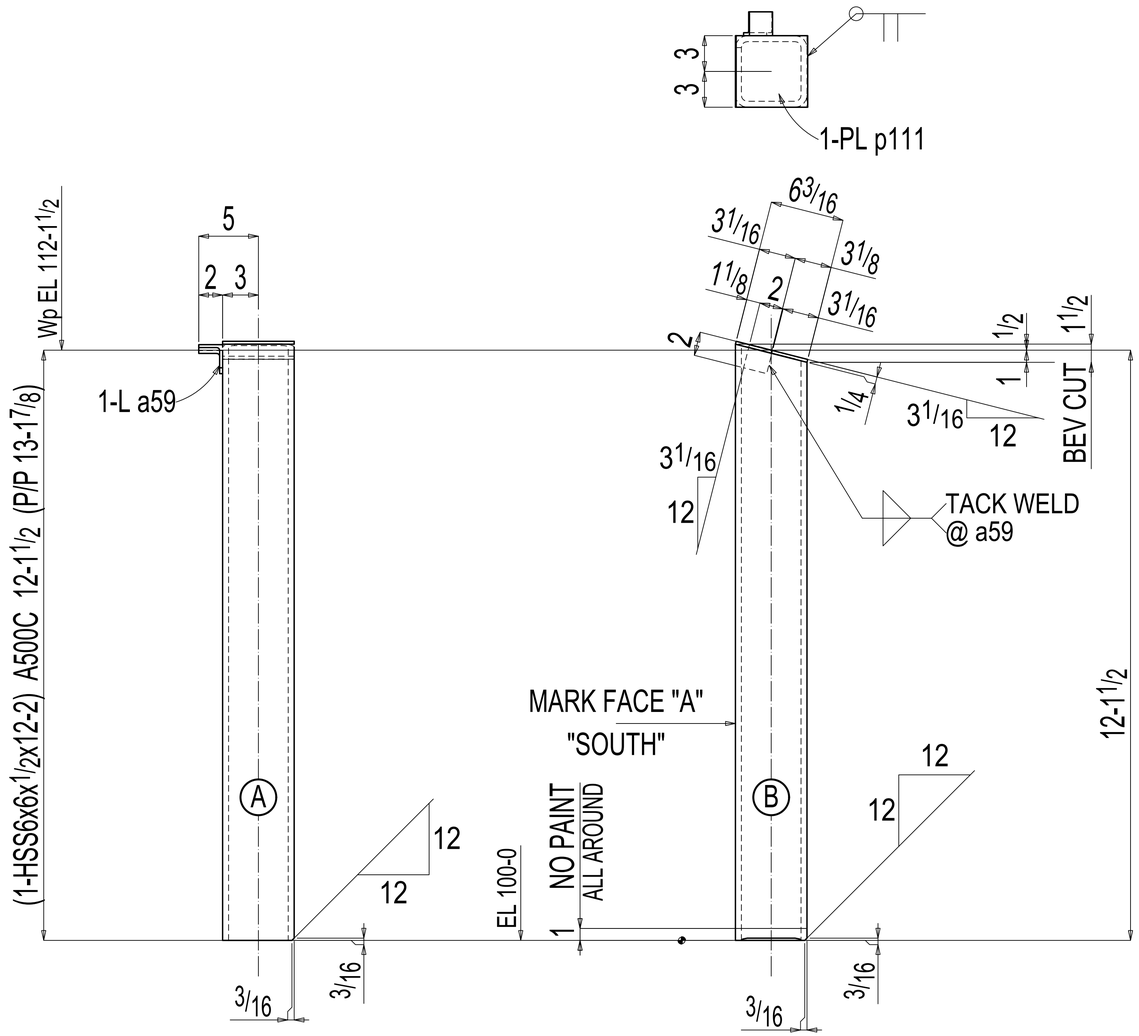

ONE COLUMN C8

AT GRID:
3 & A

ALL CLOUDED "APPROVER VERIFY" NOTES RETURNED TO US WITH NO RESPONSE WILL BE UNDERSTOOD TO BE ACCEPTABLE BY THE OWNER AND WILL BE INCORPORATED INTO CONSTRUCTION.

USE WELD SPECS:

ISSUED FOR FAB:

CUTTING: DRILLED: FITTING GA: WELD GA: CHECKED BY:

REMARKS:

MARK ID:

PO:

CUSTOMER REF:

GENERAL NOTES:

ALL HOLES ARE 13/16 Ø U.N.O.
COPE RADIUS = 1½" UNO
SLOT LENGTHS ARE SHOWN OVERALL
FINISH:STD SHOP PRIMER

470.43 lbs EACH

REV	DETAILS	BY	DC	DATE
0				
A				

CLIENT:

PROJECT:

TITLE: COLUMN

CATEGORY UNO:

DRAWN: CHECKED: JOB No: DWG No: C8 DIV: REV: 0

BILL OF MATERIAL 1 QTY'S						
QTY	MARK	DESCRIPTION	LENGTH		WEIGHT	REMARKS
ONE	C9	HSS6x6x1/2	12	2	429	B1E A500C
1	a59	L2x2x1/4	0	2	1	A36
1	p111	PL1/4x6	0	6 3/16	3	A36
		TOTAL WEIGHT THIS DRAWING :			433	

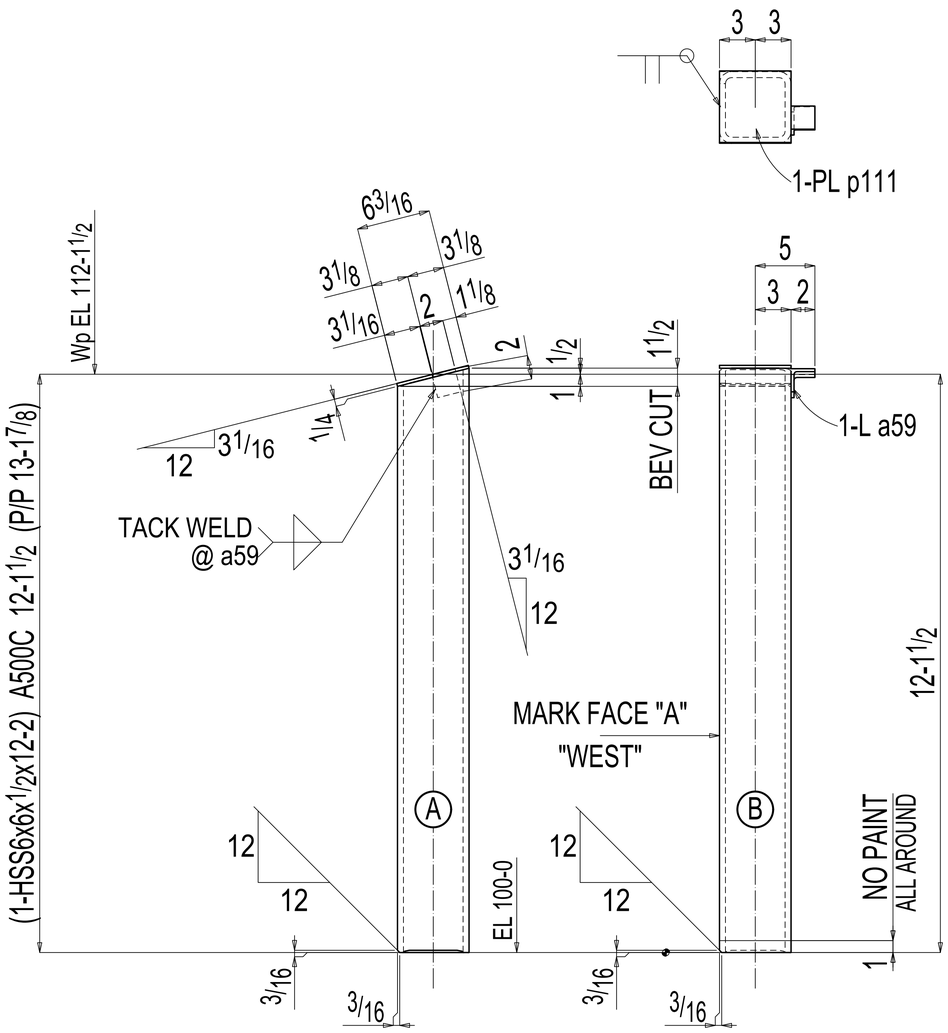

ONE COLUMN C9

AT GRID:
3 & H

ALL CLOUDED "APPROVER VERIFY" NOTES RETURNED TO US WITH NO RESPONSE WILL BE UNDERSTOOD TO BE ACCEPTABLE BY THE OWNER AND WILL BE INCORPORATED INTO CONSTRUCTION.

USE WELD SPECS:

ISSUED FOR FAB:

CUTTING: DRILLED: FITTING GA: WELD GA: CHECKED BY:

REMARKS:

MARK ID:

PO:

CUSTOMER REF:

CLIENT:

PROJECT:

TITLE: COLUMN

CATEGORY UNO:

DRAWN: CHECKED:

JOB No: DWG No: C9 DIV: REV: 0

GENERAL NOTES:

ALL HOLES ARE 13/16 Ø U.N.O.
COPE RADIUS = 1½" UNO
SLOT LENGTHS ARE SHOWN OVERALL
FINISH:STD SHOP PRIMER

470.43 lbs EACH

REV	DETAILS	BY	DC	DATE
0				
A				

BILL OF MATERIAL 1 QTY'S

QTY	MARK	DESCRIPTION	LENGTH		WEIGHT	REMARKS
ONE	C10	HSS6x6x1/2	12	2	429	B1E A500C
2	a59	L2x2x1/4	0	2	1	A36
1	p111	PL1/4x6	0	63/16	3	A36
		TOTAL WEIGHT THIS DRAWING :			433	

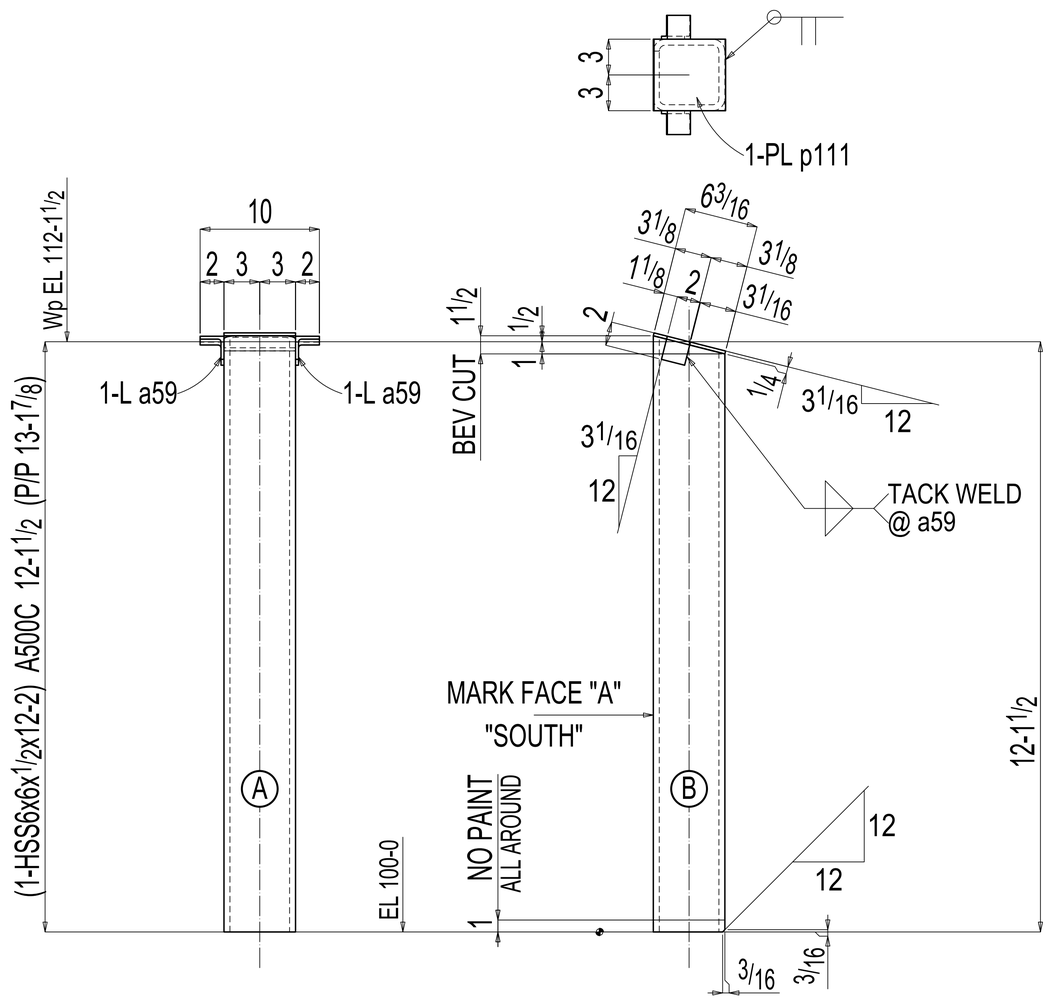

ONE COLUMN C10

AT GRID:
3 & E

ALL CLOUDED "APPROVER VERIFY" NOTES RETURNED TO US WITH NO RESPONSE WILL BE UNDERSTOOD TO BE ACCEPTABLE BY THE OWNER AND WILL BE INCORPORATED INTO CONSTRUCTION.

USE WELD SPECS: | ISSUED FOR FAB: | CUTTING: | DRILLED: | FITTING GA: | WELD GA: | CHECKED BY:

GENERAL NOTES:

ALL HOLES ARE 13/16 Ø U.N.O.
COPE RADIUS = 1/2" UNO
SLOT LENGTHS ARE SHOWN OVERALL
FINISH:STD SHOP PRIMER

470.43 lbs EACH

REV	DETAILS	BY	DC	DATE
0				
A				

CUSTOMER REF:

REMARKS:

MARK ID:

PO:

CLIENT:

PROJECT:

TITLE: COLUMN

CATEGORY UNO:

DRAWN: | CHECKED: | JOB No: | DIV: | DWG No: C10 | REV: 0

BILL OF MATERIAL 1 QTY'S						
QTY	MARK	DESCRIPTION	LENGTH		WEIGHT	REMARKS
ONE	C11	HSS6x6x1/2	12	2	858	B1E A500C
1	p111	PL1/4x6	0	63/16	3	A36
		TOTAL WEIGHT THIS DRAWING :			861	

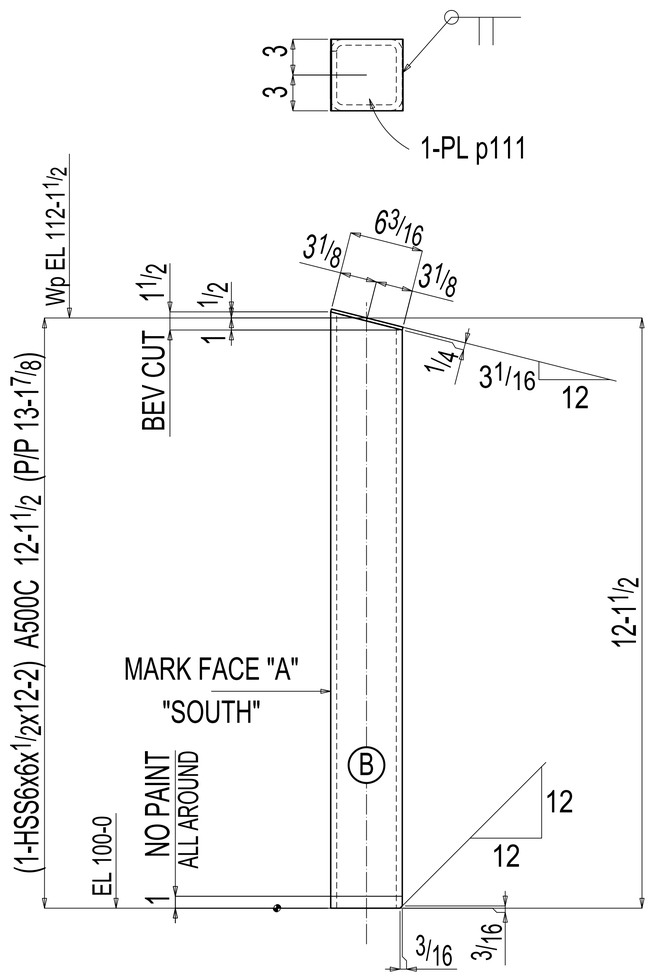

ONE COLUMN C11

AT GRID:
3 & F.5

ALL CLOUDED "APPROVER VERIFY" NOTES RETURNED TO US WITH NO RESPONSE WILL BE UNDERSTOOD TO BE ACCEPTABLE BY THE OWNER AND WILL BE INCORPORATED INTO CONSTRUCTION.

USE WELD SPECS: | ISSUED FOR FAB: | CUTTING: | DRILLED: | FITTING GA: | WELD GA: | CHECKED BY:

GENERAL NOTES:

ALL HOLES ARE 13/16 Ø U.N.O.
COPE RADIUS = 1/2" UNO
SLOT LENGTHS ARE SHOWN OVERALL
FINISH:STD SHOP PRIMER

470.43 lbs EACH

REMARKS:

MARK ID:

CLIENT:

PROJECT:

TITLE: COLUMN

CATEGORY UNO:

PO:

CUSTOMER REF:

REV	DETAILS	BY	DC	DATE
0				
A				

DRAWN: | CHECKED: | JOB No: | DIV: | DWG No: C11 | REV: 0

BILL OF MATERIAL 1 QTY'S

QTY	MARK	DESCRIPTION	LENGTH		WEIGHT	REMARKS
ONE	C12	HSS6x6x1/2	12	2	429	B1E A500C
2	a59	L2x2x1/4	0	2	1	A36
1	p143	PL3/8x11 3/4	1	4 13/16	21	A36
1	p111	PL1/4x6	0	6 3/16	3	A36
		TOTAL WEIGHT THIS DRAWING :			454	

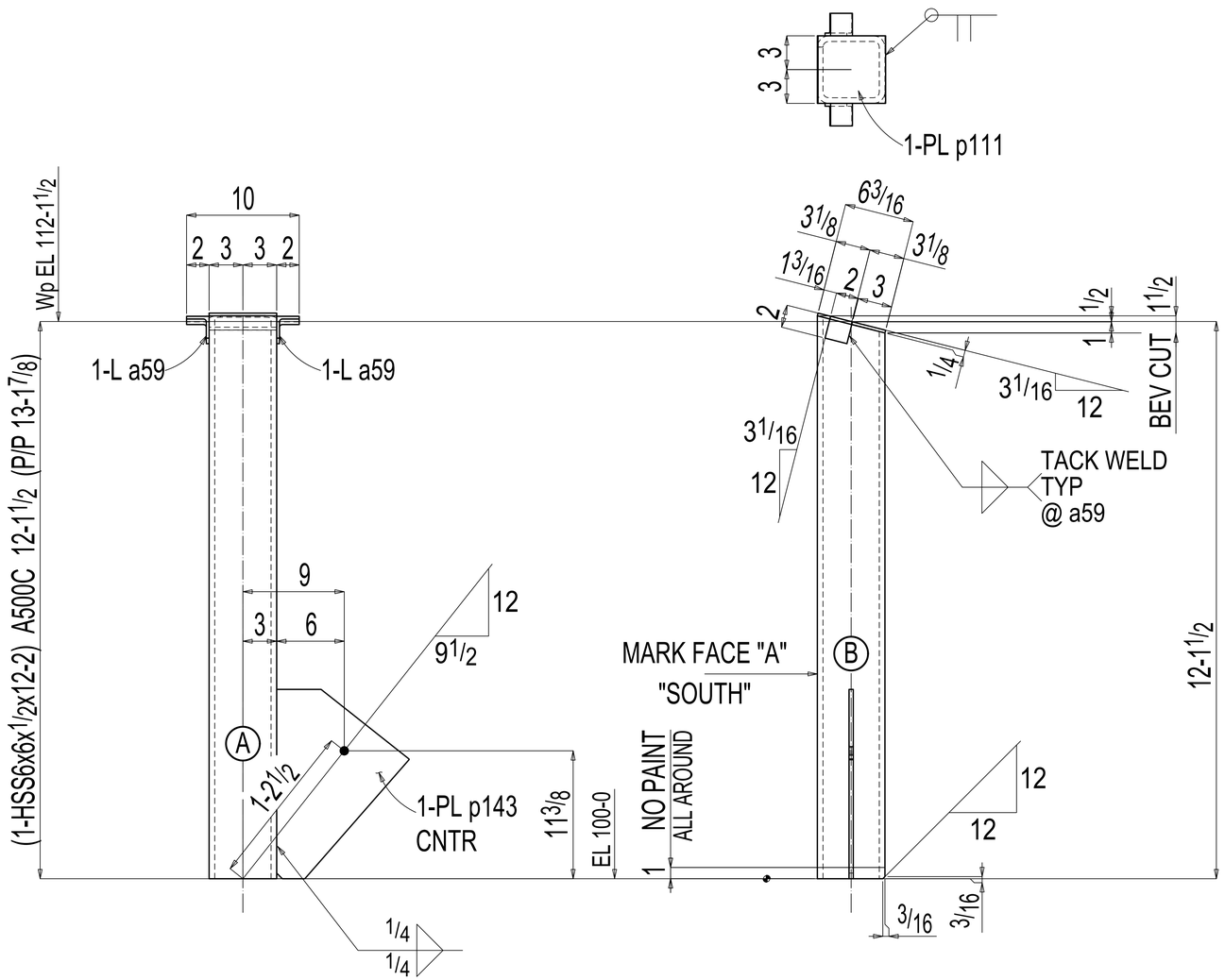

ONE COLUMN C12

AT GRID:
3 & G

ALL CLOUDED "APPROVER VERIFY" NOTES RETURNED TO US WITH NO RESPONSE WILL BE UNDERSTOOD TO BE ACCEPTABLE BY THE OWNER AND WILL BE INCORPORATED INTO CONSTRUCTION.

USE WELD SPECS: | ISSUED FOR FAB: | CUTTING: | DRILLED: | FITTING GA: | WELD GA: | CHECKED BY:

GENERAL NOTES:

ALL HOLES ARE 13/16 Ø U.N.O.
COPE RADIUS = 1/2" UNO
SLOT LENGTHS ARE SHOWN OVERALL
FINISH:STD SHOP PRIMER

470.43 lbs EACH

REV	DETAILS	BY	DC	DATE
0				
A				

CUSTOMER REF:

REMARKS:

MARK ID:

PO:

CLIENT:

PROJECT:

TITLE: COLUMN

CATEGORY UNO:

DRAWN: | CHECKED: | JOB No: | DIV: | DWG No: C12 | REV: 0

BILL OF MATERIAL 3 QTY'S						
QTY	MARK	DESCRIPTION	LENGTH		WEIGHT	REMARKS
3	C13	HSS6x6x1/2	12	2	1286	B1E A500C
6	a59	L2x2x1/4	0	2	3	A36
3	p111	PL1/4x6	0	6 3/16	8	A36
		TOTAL WEIGHT THIS DRAWING :			1297	

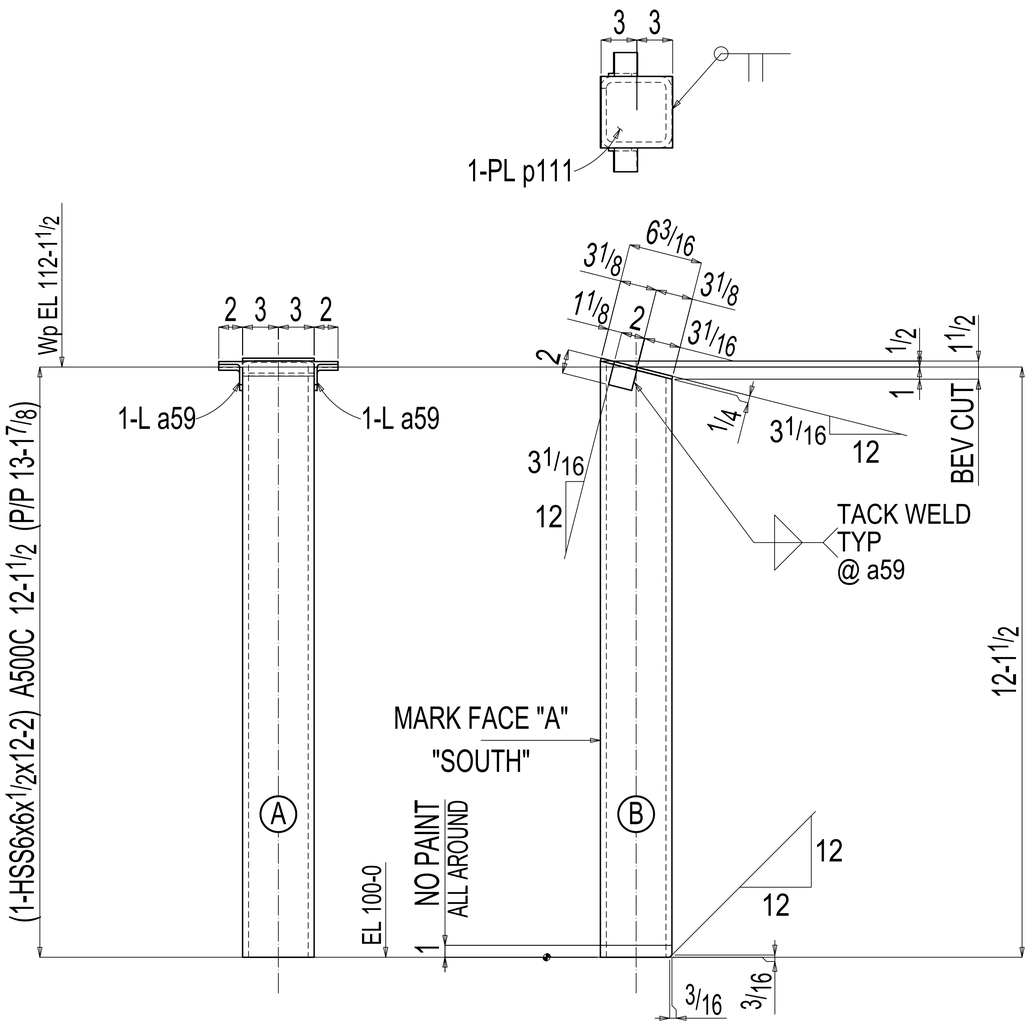

3 COLUMN C13

AT GRID:
3 & F
3 & C
3 & B

ALL CLOUDED "APPROVER VERIFY" NOTES RETURNED TO US WITH NO RESPONSE WILL BE UNDERSTOOD TO BE ACCEPTABLE BY THE OWNER AND WILL BE INCORPORATED INTO CONSTRUCTION.

USE WELD SPECS: | ISSUED FOR FAB: | CUTTING: | DRILLED: | FITTING GA: | WELD GA: | CHECKED BY:

GENERAL NOTES:

ALL HOLES ARE 13/16 Ø U.N.O.
COPE RADIUS = 1/2" UNO
SLOT LENGTHS ARE SHOWN OVERALL
FINISH:STD SHOP PRIMER

470.43 lbs EACH

REV	DETAILS	BY	DC	DATE
0				
A				

REMARKS:

MARK ID:

CLIENT:

PROJECT:

TITLE: COLUMN

CUSTOMER REF: | PO: | CATEGORY UNO:

DRAWN: | CHECKED: | JOB No: | DIV: | DWG No: C13 | REV: 0

BILL OF MATERIAL 1 QTY'S						
QTY	MARK	DESCRIPTION	LENGTH		WEIGHT	REMARKS
ONE	C14	HSS8x6x1/2	15	5 1/4	649	B1E A500C
1	a59	L2x2x1/4	0	2	1	A36
1	p116	PL1/4x6	0	8 1/4	4	A36
		TOTAL WEIGHT THIS DRAWING :			654	

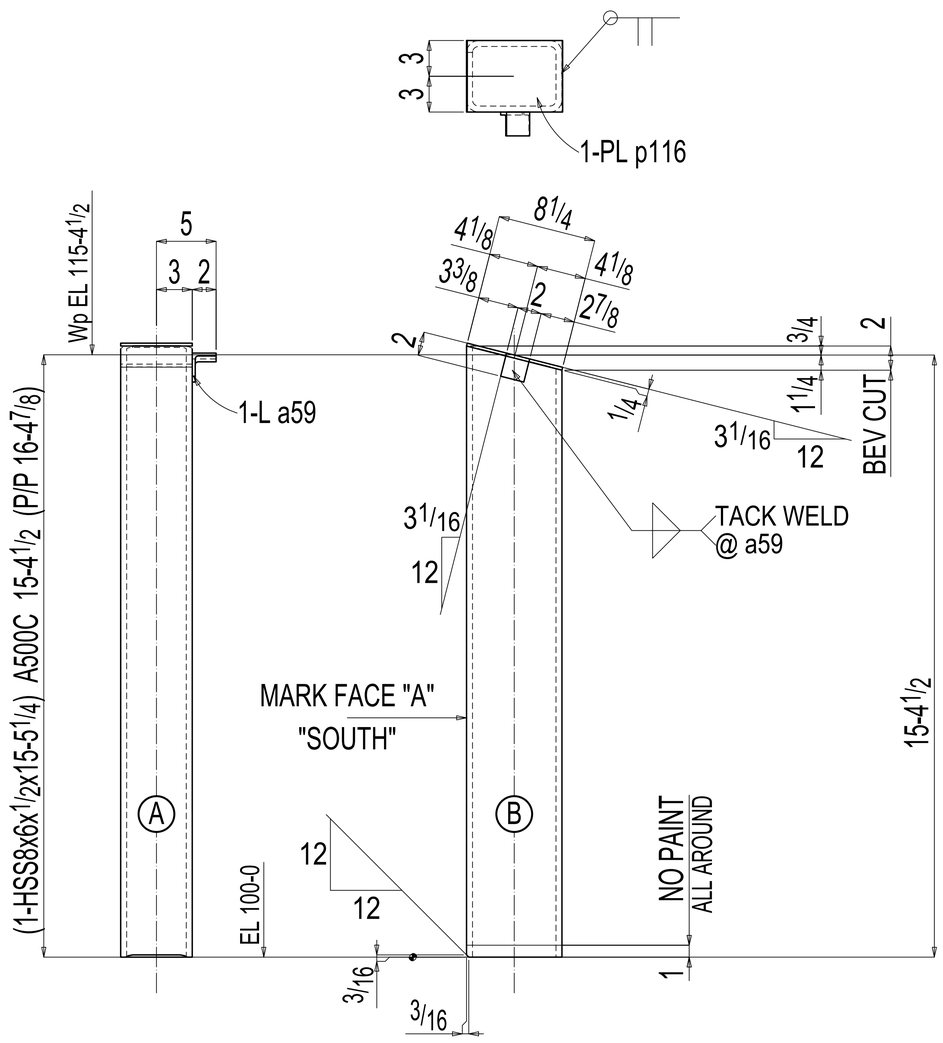

ONE COLUMN C14

AT GRID:
2 & B

ALL CLOUDED "APPROVER VERIFY" NOTES RETURNED TO US WITH NO RESPONSE WILL BE UNDERSTOOD TO BE ACCEPTABLE BY THE OWNER AND WILL BE INCORPORATED INTO CONSTRUCTION.

USE WELD SPECS:

ISSUED FOR FAB:

CUTTING: DRILLED: FITTING GA: WELD GA: CHECKED BY:

GENERAL NOTES:

ALL HOLES ARE 13/16 Ø U.N.O.
COPE RADIUS = 1/2" UNO
SLOT LENGTHS ARE SHOWN OVERALL
FINISH:STD SHOP PRIMER

470.43 lbs EACH

REV	DETAILS	BY	DC	DATE
0				
A				

REMARKS:

MARK ID:

PO:

CLIENT:

PROJECT:

TITLE: COLUMN

CATEGORY UNO:

DRAWN: CHECKED: JOB No: DIV: DWG No: C14 REV: 0

CUSTOMER REF:

BILL OF MATERIAL 1 QTY'S						
QTY	MARK	DESCRIPTION	LENGTH		WEIGHT	REMARKS
ONE	C15	HSS6x6x1/2	12	2	429	B1E A500C
2	a59	L2x2x1/4	0	2	1	A36
1	p111	PL1/4x6	0	6 3/16	3	A36
		TOTAL WEIGHT THIS DRAWING :			433	

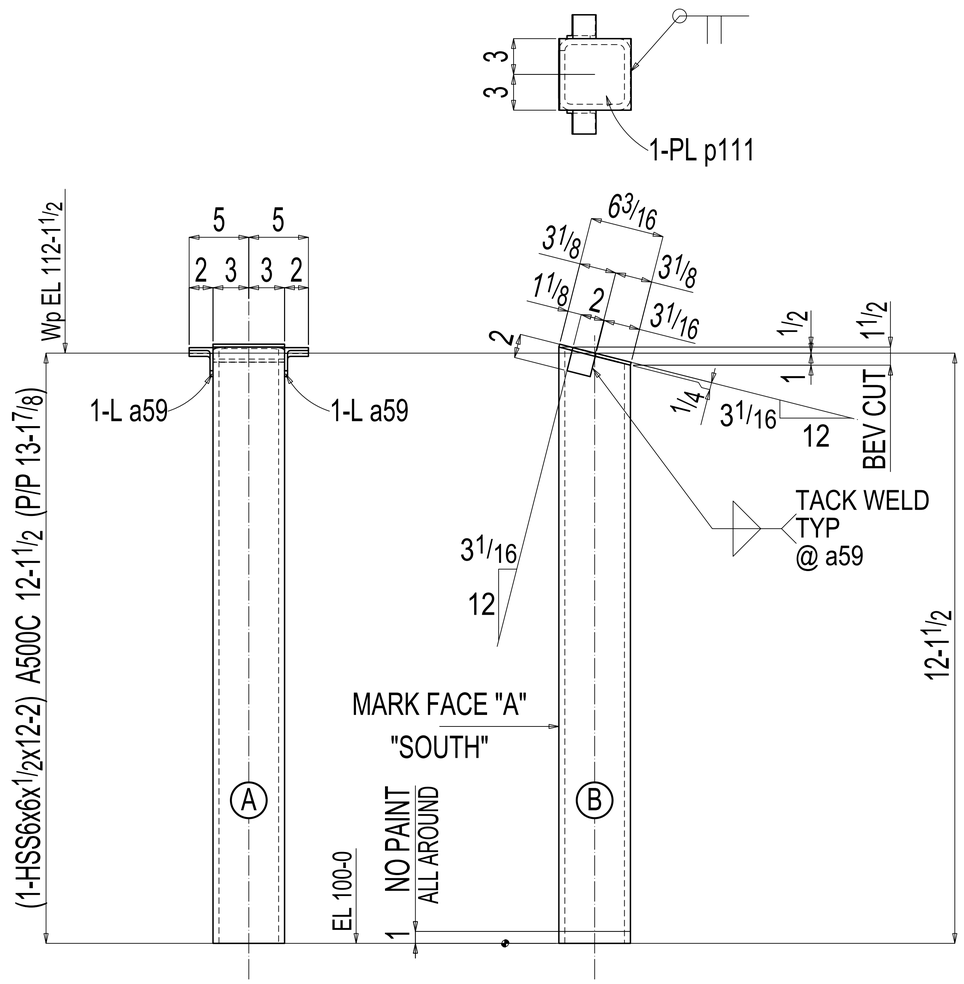

ONE COLUMN C15

AT GRID:
3 & D

ALL CLOUDED "APPROVER VERIFY" NOTES RETURNED TO US WITH NO RESPONSE WILL BE UNDERSTOOD TO BE ACCEPTABLE BY THE OWNER AND WILL BE INCORPORATED INTO CONSTRUCTION.

USE WELD SPECS: | ISSUED FOR FAB: | CUTTING: | DRILLED: | FITTING GA: | WELD GA: | CHECKED BY:

GENERAL NOTES:

ALL HOLES ARE 13/16 Ø U.N.O.
COPE RADIUS = 1/2" UNO
SLOT LENGTHS ARE SHOWN OVERALL
FINISH:STD SHOP PRIMER

470.43 lbs EACH

REMARKS:

MARK ID:

PO:

CLIENT:

PROJECT:

TITLE: COLUMN

CATEGORY UNO:

REV	DETAILS	BY	DC	DATE
0				
A				

CUSTOMER REF:

DRAWN: | CHECKED: | JOB No: | DIV: | DWG No: C15 | REV: 0

BILL OF MATERIAL 3 QTY'S

QTY	MARK	DESCRIPTION	LENGTH	WEIGHT	REMARKS
3	C16	HSS8x6x1/2	20 9 3/8	2635	B1E A500C
6	a59	L2x2x1/4	0 2	3	A36
3	p116	PL1/4x6	0 8 1/4	11	A36
		TOTAL WEIGHT THIS DRAWING :		2649	

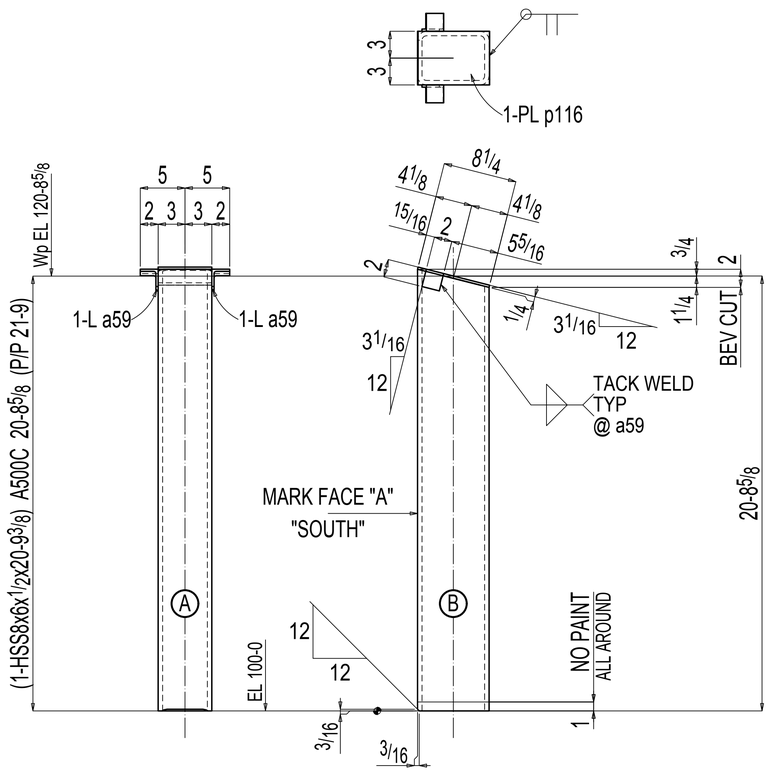

3 COLUMN C16

AT GRID:
1 & F
1 & D
1 & C

ALL CLOUDED "APPROVER VERIFY" NOTES RETURNED TO US WITH NO RESPONSE WILL BE UNDERSTOOD TO BE ACCEPTABLE BY THE OWNER AND WILL BE INCORPORATED INTO CONSTRUCTION.

USE WELD SPECS: | ISSUED FOR FAB: | CUTTING: | DRILLED: | FITTING GA: | WELD GA: | CHECKED BY:

GENERAL NOTES:

ALL HOLES ARE 13/16 Ø U.N.O.
COPE RADIUS = 1/2" UNO
SLOT LENGTHS ARE SHOWN OVERALL
FINISH:STD SHOP PRIMER

470.43 lbs EACH

REV	DETAILS	BY	DC	DATE
0				
A				

REMARKS:

MARK ID:

PO:

CLIENT:

PROJECT:

TITLE: COLUMN

CATEGORY UNO:

DRAWN: | CHECKED: | JOB No: | DIV: | DWG No: C16 | REV: 0

CUSTOMER REF:

BILL OF MATERIAL 1 QTY'S

QTY	MARK	DESCRIPTION	LENGTH	WEIGHT	REMARKS
ONE	C17	HSS8x6x1/2	20 9 3/8	874	B1E A500C
1	a59	L2x2x1/4	0 2	1	A36
1	p116	PL1/4x6	0 8 1/4	4	A36
		TOTAL WEIGHT THIS DRAWING :		879	

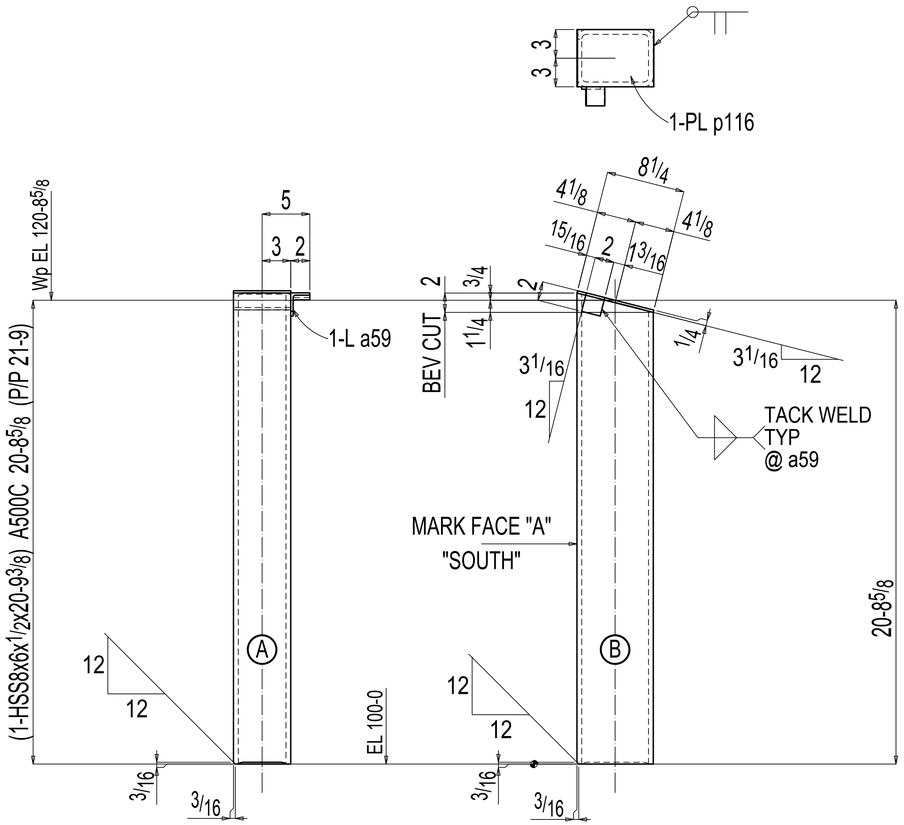

ONE COLUMN C17

AT GRID:
1 & H

ALL CLOUDED "APPROVER VERIFY" NOTES RETURNED TO US WITH NO RESPONSE WILL BE UNDERSTOOD TO BE ACCEPTABLE BY THE OWNER AND WILL BE INCORPORATED INTO CONSTRUCTION.

USE WELD SPECS:

ISSUED FOR FAB:

CUTTING: DRILLED: FITTING GA: WELD GA: CHECKED BY:

REMARKS:

MARK ID:

PO:

CUSTOMER REF:

GENERAL NOTES:

ALL HOLES ARE 13/16 Ø U.N.O.
COPE RADIUS = 1½" UNO
SLOT LENGTHS ARE SHOWN OVERALL
FINISH:STD SHOP PRIMER

470.43 lbs EACH

REV	DETAILS	BY	DC	DATE
0				
A				

CLIENT:

PROJECT:

TITLE: COLUMN

CATEGORY UNO:

DRAWN: CHECKED:

JOB No: DWG No: C17 DIV: REV: 0

BILL OF MATERIAL 1 QTY'S

QTY	MARK	DESCRIPTION	LENGTH	WEIGHT	REMARKS
ONE	C18	HSS8x6x1/2	15 5/4	649	B1E A500C
1	p116	PL1/4x6	0 8/4	4	A36
		TOTAL WEIGHT THIS DRAWING :		853	

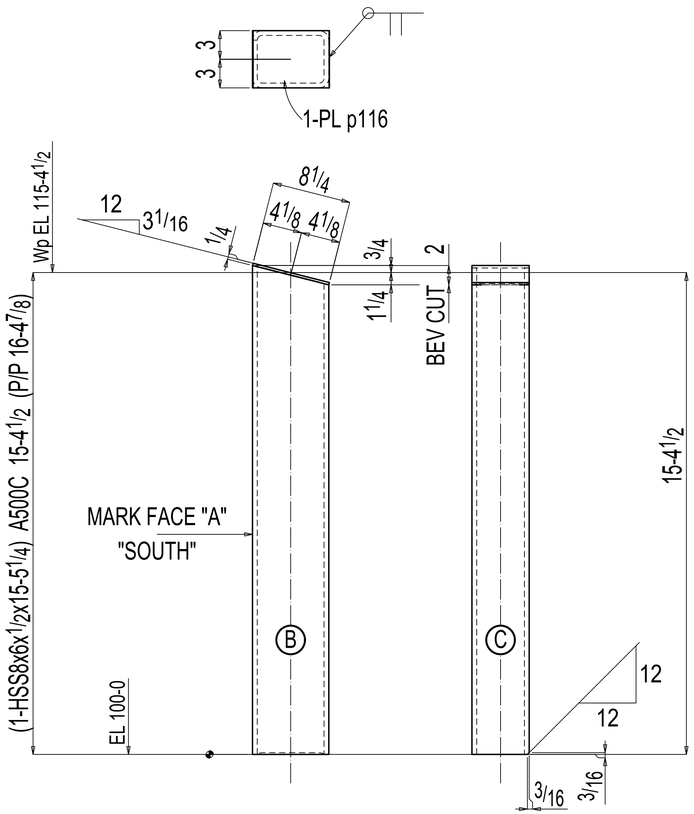

ONE COLUMN C18

AT GRID:
2 & H

ALL CLOUDED "APPROVER VERIFY" NOTES RETURNED TO US WITH NO RESPONSE WILL BE UNDERSTOOD TO BE ACCEPTABLE BY THE OWNER AND WILL BE INCORPORATED INTO CONSTRUCTION.

USE WELD SPECS:

ISSUED FOR FAB:

CUTTING: DRILLED: FITTING GA: WELD GA: CHECKED BY:

REMARKS:

MARK ID:

CLIENT:

PROJECT:

TITLE: COLUMN

GENERAL NOTES:

ALL HOLES ARE 13/16 Ø U.N.O.
COPE RADIUS = 1/2" UNO
SLOT LENGTHS ARE SHOWN OVERALL
FINISH:STD SHOP PRIMER

470.43 lbs EACH

REV	DETAILS	BY	DC	DATE
0				
A				

CUSTOMER REF:

PO:

CATEGORY UNO:

DRAWN: CHECKED: JOB No: DWG No: DIV: REV: 0