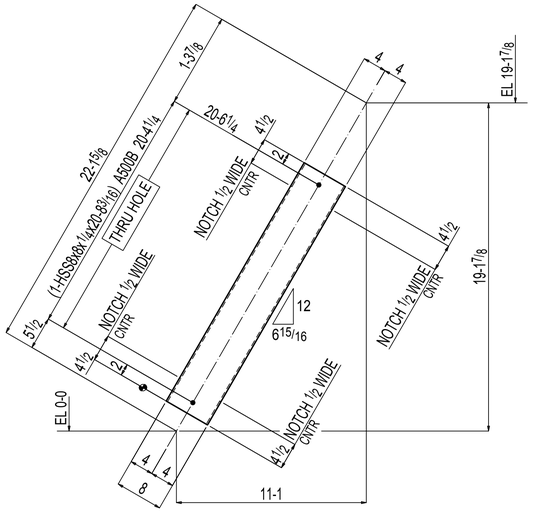

ONE VERTICAL BRACE 33VB1

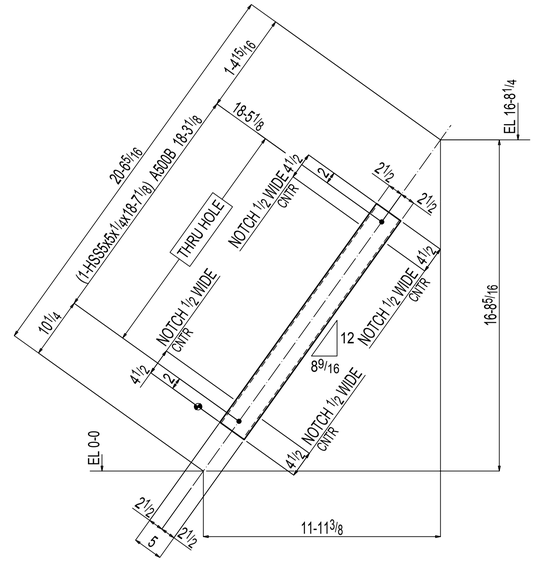

ONE VERTICAL BRACE 33VB2

BILL OF MATERIAL

NO.	SECTION	FIT.	IN.	TEMP MARK	SHIPPING MARK	WEIGHT UNIT	WEIGHT TOTAL	REMARKS
ONE	VERTICAL BRACE				33VB1	534	534	
1	HSS8x8x1/4	20	8 3/16	33VB1		534	534	A500B
	FIELD BOLTS							
1	3/4 Dia A307	0	9					
1	3/4 Dia A325N	0	9					
ONE	VERTICAL BRACE				33VB2	290	290	
1	HSS5x5x1/4	18	7 1/8	33VB2		290	290	A500B
	FIELD BOLTS							
2	3/4 Dia A307	0	6					
ONE	VERTICAL BRACE				33VB3	294	294	
1	HSS5x5x1/4	18	9 11/16	33VB3		294	294	A500B
	FIELD BOLTS							
2	3/4 Dia A307	0	6					
ONE	VERTICAL BRACE				33VB4	302	302	
1	HSS6x6x1/4	15	10 11/16	33VB4		302	302	A500B
	FIELD BOLTS							
1	3/4 Dia A307	0	7					
1	3/4 Dia A325N	0	7					
ONE	VERTICAL BRACE				33VB5	846	846	
1	HSS8x8x3/8	22	5 3/8	33VB5		846	846	A500B
	FIELD BOLTS							
2	3/4 Dia A307	0	9					

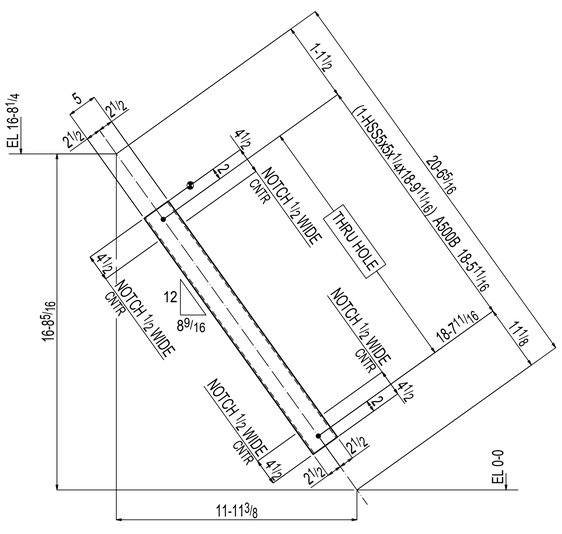

ONE VERTICAL BRACE 33VB3

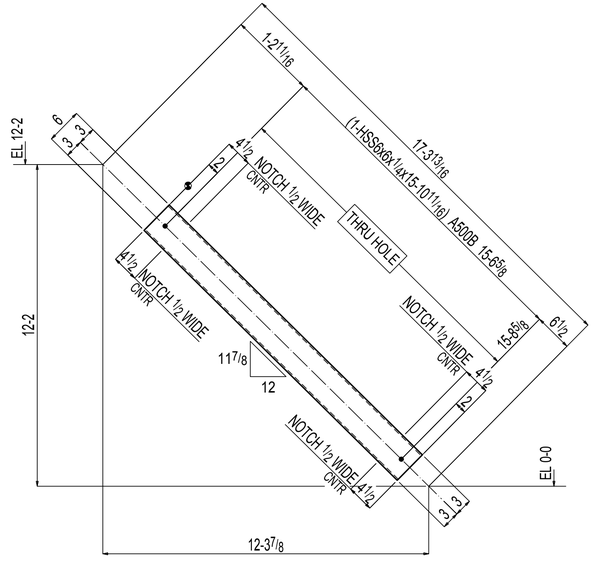

ONE VERTICAL BRACE 33VB4

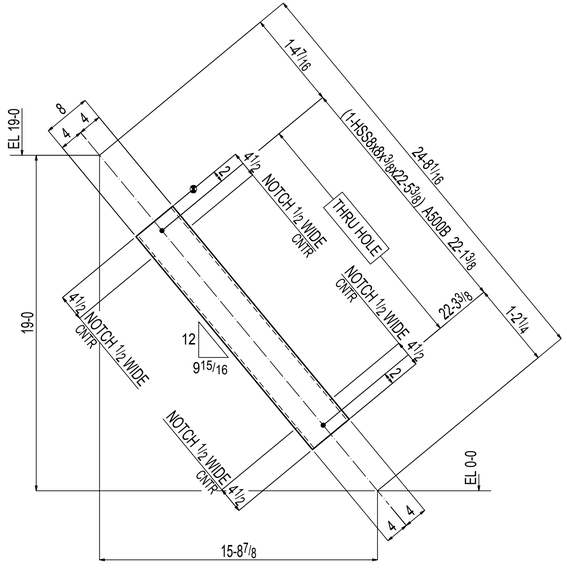

ONE VERTICAL BRACE 33VB5

TOTAL WEIGHT THIS DRAWINGS:1461

PAINT: 1-S/C PRIMER

OPEN HOLES: 13/16" DIA (UNO) OPEN SLTS: 13/16x1 DIA (UNO) BOLT: 3/4" DIA A325(UNO) EDGE DIST. 1 1/2"(UNO)

MATERIAL	
WIDE FLANGE	A992 (UNO)
PIPE	A53B (UNO)
TUBE	A500B (UNO)
CHANNEL	A36 (UNO)
PLATE,ANGLE,BAR	A36 (UNO)

THESE SHOP AND ERECTION DRAWINGS ARE AND SHALL REMAIN THE PROPERTY OF MODERN MACHINE SHOP, INC. THESE SHALL NOT BE USED, REPRODUCED, MODIFIED, OR COPIED IN ANY FORM OR MANNER WITHOUT THE EXPRESS, WRITTEN PERMISSION, CONSENT, AND DUE COMPENSATION TO THE FABRICATOR:
MODERN MACHINE SHOP, INC., COPYRIGHT 2013

NOTICE TO CONTRACTORS AND/OR ERECTORS

MODERN MACHINE SHOP, INC. WILL NOT ACCEPT BACKCHARGERS FOR CORRECTIVE WORK OR REPLACED MATERIALS UNLESS AUTHORIZED AND APPROVED. FAILURE TO COMPLY WITH THIS REQUIREMENT WILL BECOME CONTRACTORS/ERECTORS LIABILITY. ANY QUESTIONS CALL (955) 722-4656

DATE: _____ SIGNATURE: _____

REF:E8 THRU E20

ALL RUNNING DIMENSIONS FROM END OF MAIN MATERIAL.
ALL VERTICAL SPACING OF HOLES TO BE 3"UNLESS NOTED.
ALL SNIPS TO BE 3/4 X 3/4 UNLESS NOTED.
ALL COPES TO BE RADIUSED.
⊗ DENOTES "CONTACT SURFACE"THIS SIDE OF PLATE.
HOLES IN END PLATES AND OUTSTANDING LEGS OF END CLIPS
X INDICATES LAYOUT MARK FOR FABRICATION.
LD=LIW,DTI HD=FLT WASHER FL=WROUGHT WASHER
MEMBERS ARE TO BE ERECTED SO THAT MARKED END IS IN SAME LOCATION AS ON ERECTION DRAWING NO.

NO.	DATE	BY	DESCRIPTION

REV.

CUSTOMER:
ARCHITECT:
PROJECT:
LOCATION:

DRWN _____ DATE _____ FOR APPL. _____ ORDER NO. _____
CHKD _____ DATE _____ TO SHOP _____ REV. 0 DWG. 33

BILL OF MATERIAL 1 QTY'S						
QTY	MARK	DESCRIPTION	LENGTH		WEIGHT	REMARKS
ONE	VB1	HSS8x4x1/4	20	5 7/8	390	A500C
		TOTAL WEIGHT THIS DRAWING :			390	
		FIELD BOLTS				
2		3/4 Dia A307	0	5 1/2		+1HD WASH

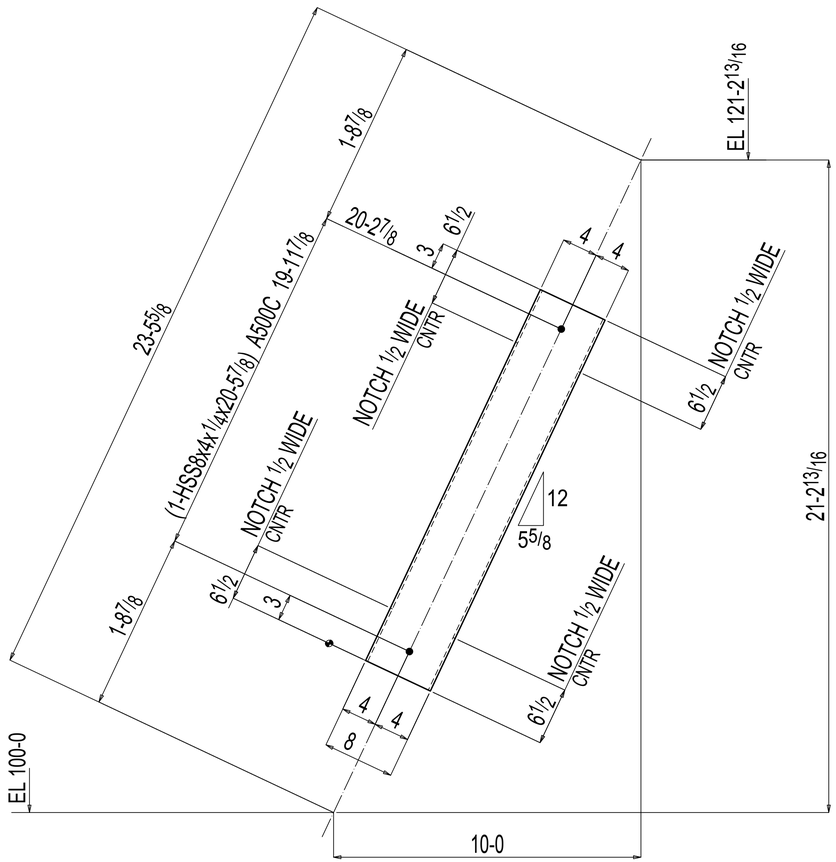

ONE VERTICAL BRACE VB1

ALL CLOUDED "APPROVER VERIFY" NOTES RETURNED TO US WITH NO RESPONSE WILL BE UNDERSTOOD TO BE ACCEPTABLE BY THE OWNER AND WILL BE INCORPORATED INTO CONSTRUCTION.

USE WELD SPECS:

ISSUED FOR FAB:

CUTTING: DRILLED: FITTING GA: WELD GA: CHECKED BY:

GENERAL NOTES:

ALL HOLES ARE 13/16 Ø U.N.O.
COPE RADIUS = 1/2" UNO
SLOT LENGTHS ARE SHOWN OVERALL
FINISH:STD SHOP PRIMER

470.43 lbs EACH

REV	DETAILS	BY	DC	DATE
0				
A				

REMARKS:

MARK ID:

CLIENT:

PROJECT:

TITLE: VERTICAL BRACE

CUSTOMER REF:

PO:

CATEGORY UNO:

DRAWN: CHECKED: JOB No: DIV: DWG No: VB1 REV: 0

BILL OF MATERIAL 1 QTY'S

QTY	MARK	DESCRIPTION	LENGTH	WEIGHT	REMARKS
ONE	VB2	HSS8x4x1/4	16 7 1/16	316	A500C
		TOTAL WEIGHT THIS DRAWING :		316	
		FIELD BOLTS			
2		3/4 Dia A307	0 5 1/2		+1HD WASH

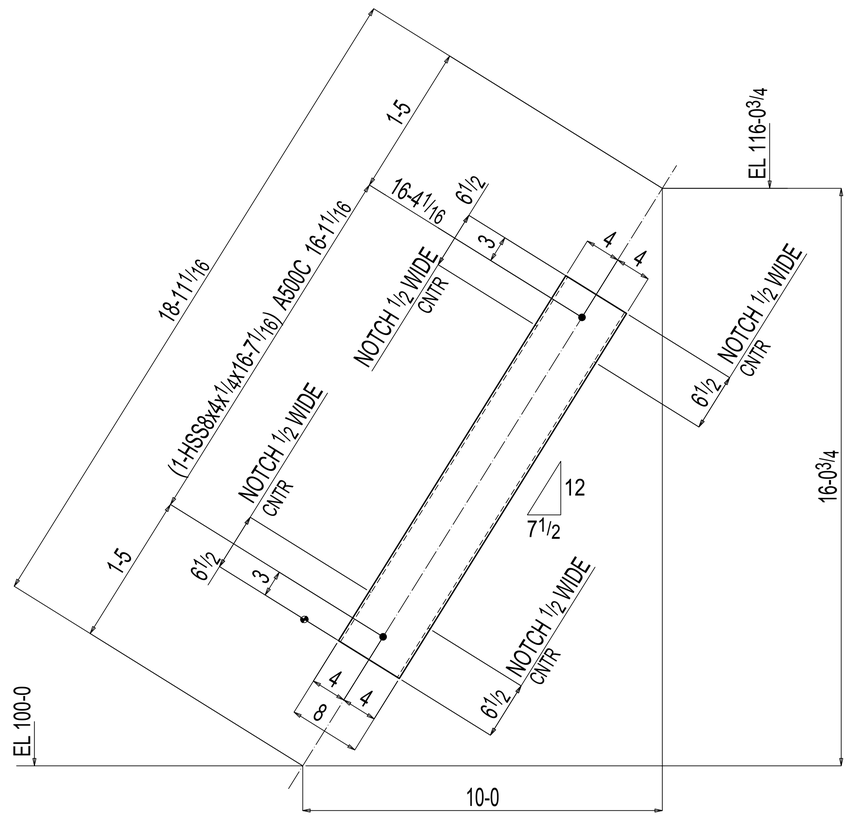

ONE VERTICAL BRACE VB2

ALL CLOUDED "APPROVER VERIFY" NOTES RETURNED TO US WITH NO RESPONSE WILL BE UNDERSTOOD TO BE ACCEPTABLE BY THE OWNER AND WILL BE INCORPORATED INTO CONSTRUCTION.

USE WELD SPECS:

ISSUED FOR FAB:

CUTTING: DRILLED: FITTING GA: WELD GA: CHECKED BY:

REMARKS:

MARK ID:

CLIENT:

PROJECT:

TITLE: VERTICAL BRACE

CATEGORY UNO:

PO:

DRAWN: CHECKED:

JOB No: DIV:

DWG No: VB2 REV: 0

GENERAL NOTES:

ALL HOLES ARE 13/16 Ø U.N.O.
COPE RADIUS = 1/2" UNO
SLOT LENGTHS ARE SHOWN OVERALL
FINISH:STD SHOP PRIMER

470.43 lbs EACH

CUSTOMER REF:	REV	DETAILS	BY	DC	DATE
	0				
	A				

BILL OF MATERIAL 1 QTY'S

QTY	MARK	DESCRIPTION	LENGTH	WEIGHT	REMARKS
ONE	VB3	HSS8x4x1/4	14 1 7/16	269	A500C
		TOTAL WEIGHT THIS DRAWING :		269	
		FIELD BOLTS			
2		3/4 Dia A307	0 5 1/2		+1HD WASH

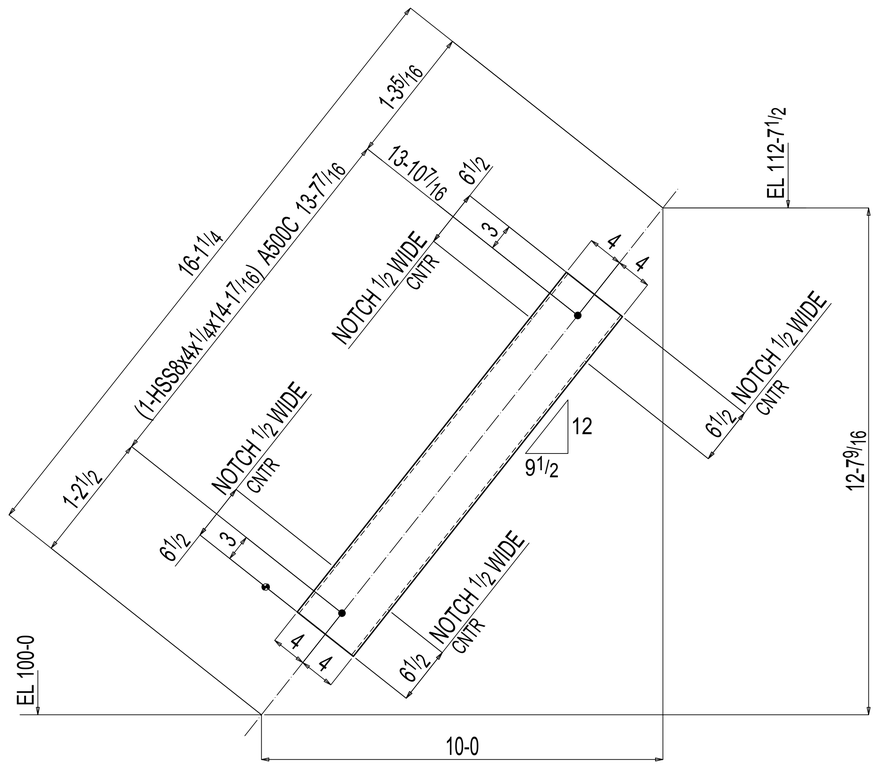

ONE VERTICAL BRACE VB3

ALL CLOUDED "APPROVER VERIFY" NOTES RETURNED TO US WITH NO RESPONSE WILL BE UNDERSTOOD TO BE ACCEPTABLE BY THE OWNER AND WILL BE INCORPORATED INTO CONSTRUCTION.

USE WELD SPECS:

ISSUED FOR FAB:

CUTTING: DRILLED: FITTING GA: WELD GA: CHECKED BY:

REMARKS:

MARK ID:

CLIENT:

PROJECT:

TITLE: VERTICAL BRACE

CATEGORY UNO:

PO:

DRAWN: CHECKED:

JOB No: DWG No: VB3 DIV: REV: 0

GENERAL NOTES:

ALL HOLES ARE 13/16 Ø U.N.O.
COPE RADIUS = 1/2" UNO
SLOT LENGTHS ARE SHOWN OVERALL
FINISH:STD SHOP PRIMER

470.43 lbs EACH

CUSTOMER REF:	REV	DETAILS	BY	DC	DATE
	0				
	A				