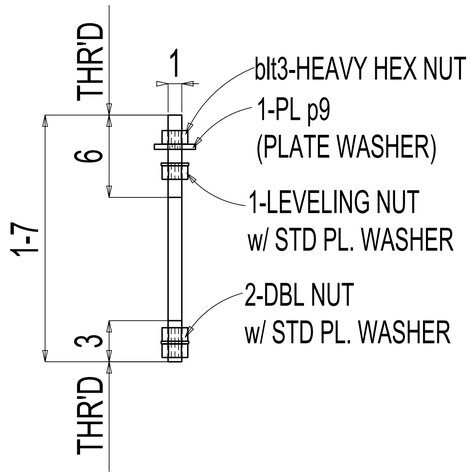

28 Anchor Rods AN1

BILL OF MATERIAL

MARK	QTY	DESCRIPTION	FT	IN	REMARKS
AN1	28	Anchor Rod			
AN1	28	RB1	1	7	F1554-GR55
p9	28	PL 3/8x3	0	3	A36
blt3	112	1 NUT			HHNT A563
blt4	56	1 WASHER			HD F436

SHOP NOTE:
SURFACE PREP:SSPC-SP2

HOLES: 13/16 DIA U.N.O. FINISH: STD SHOP PRIMER

REV	DATE	DESCRIPTION	BY
0			
A			

CLIENT:

ARCH & ENGR:

JOB NAME:

LOCATION:

DETAIL OF:

DATE: DRAWN BY:

CHECKED BY: JOB #

DWG. # 1 0

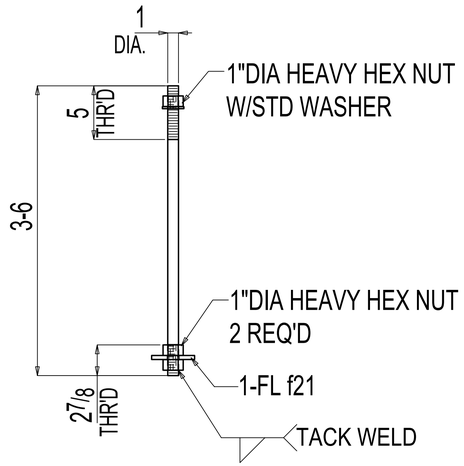

4 ANCHOR RODS 1AB2

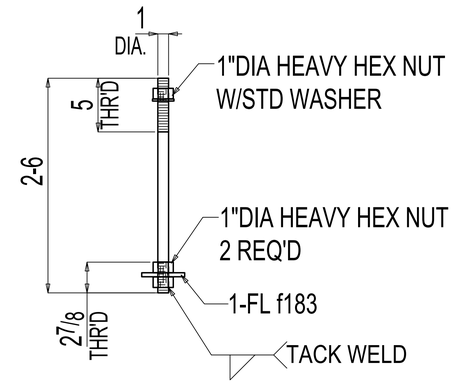

4 ANCHOR RODS 1AB3

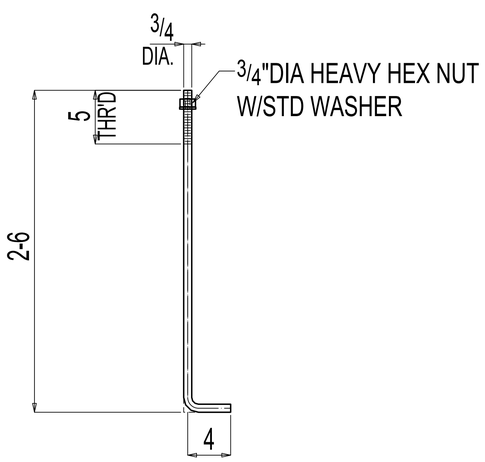

16 ANCHOR RODS 1AB4

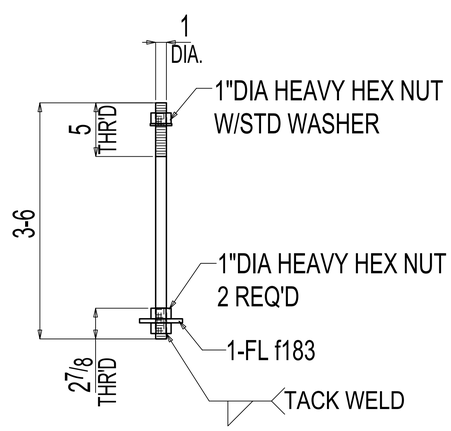

32 ANCHOR RODS 1AB5

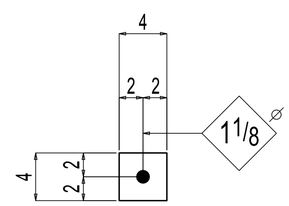

10 FL3/8x4x0-4 f21
GRADE: A36

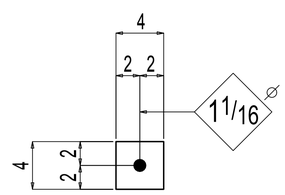

40 FL3/8x4x0-4 f183
GRADE: A36

BILL OF MATERIAL

QTY TOTAL	PC MARK	DESCRIPTION	LENGTH		REMARKS	WEIGHT TOTAL	ADVANCE MILL #
4	1AB2	ANCHOR ROD				44	
4	1AB2	1"DIA ANCHOR ROD	3	6	F1554-GR55	37	
4	f21	FL3/8x4	0	4	A36	6	
12	blt3	1"DIA HEAVY HEX NUT			A563		
4	blt4	1"DIA PLATE WASHER			F436		
4	1AB3	ANCHOR ROD				33	
4	1AB3	RB1	2	6	F1554-GR55	27	
4	f183	FL3/8x4	0	4	A36	6	
12	blt3	1"DIA HEAVY HEX NUT			A563		
4	blt4	1"DIA PLATE WASHER			F436		
16	1AB4	ANCHOR ROD				67	
16	1AB4	3/4"DIA ANCHOR ROD	2	9 3/16	F1554-GR55	67	
16	blt1	3/4"DIA HEAVY HEX NUT			A563		
16	blt2	3/4"DIA PLATE WASHER			F436		
32	1AB5	ANCHOR ROD				351	
32	1AB5	1"DIA ANCHOR ROD	3	6	F1554-GR55	299	
32	f183	FL3/8x4	0	4	A36	51	
96	blt3	1"DIA HEAVY HEX NUT			A563		
32	blt4	1"DIA PLATE WASHER			F436		

FOR FABRICATION

APPROVEL/REVIEW AUTHORITY:
PLEASE REVIEW THIS DRAWING CAREFULLY

REPRESENTS OUR INTERPRETATION OF THE INTENT OF THE CONTRACT DOCUMENTS. HOWEVER, THE STEEL FABRICATOR AND THE STRUCTURAL STEEL DETAILER ASSUME NO RESPONSIBILITY FOR THE DESIGN OF THE INFORMATION SHOWN ON THIS DRAWING. THIS IS THE RESPONSIBILITY OF THE BUYER.

UNLESS NOTED TO THE CONTRARY ON THIS DRAWING. WHEN IT IS RETURNED FROM APPROVAL IT WILL BE ASSUMED THAT ALL INFORMATION SHOWN HEREIN HAS THE AFFIRMATION OF THE APPROVAL AUTHORITY.

SUBSEQUENT CHANGES TO INFORMATION SHOWN ON THESE DRAWINGS AFTER FIRST SUBMISSION WILL BE CONSIDERED AS CONTRACT CHANGES

ERECTION DWG.

PAINT: NO PAINT CLEANING: SSPC-SP3

HOLES: 13/16"Ø | WELDS = E70XX | MAT'L = ASTM A36 } U.N

WIRE FOR SHIPMENT ALL LOOSE CLIP ANGLES

JOB NO.
4-1633

PRINTS ISSUED			REVISIONS		
NO	FOR	DATE	NO	FOR	DATE
A	APPROVAL	03-28-24			
0	FABRICATION	10-02-24			

CUSTOMER : TROOP CONTRACTING

PROJECT : WORTH JUNIOR HIGH SCHOOL
11151 NEW ENGLAND AVENUE
WORTH, IL 60482

DRAWN SDL/NSK
CHK'D SDL/NSK

DRAWING TITLE : ANCHOR BOLT DETAIL

ONE